Dolby® Digital Cinema System Manual

Issue 3
Models DSS200, DSL100
Software Version 4.2

Part Number 9110420

Dolby Laboratories, Inc.

Corporate Headquarters

Dolby Laboratories, Inc.
100 Potrero Avenue
San Francisco, CA 94103-4813 USA
Telephone 415-558-0200
Fax 415-863-1373
www.dolby.com

European Headquarters

Dolby Laboratories, Inc.
Wootton Bassett
Wiltshire SN4 8QJ England
Telephone 44-1793-842100
Fax 44-1793-842101

DISCLAIMER OF WARRANTIES:

EQUIPMENT MANUFACTURED BY DOLBY LABORATORIES IS WARRANTED AGAINST DEFECTS IN MATERIALS AND WORKMANSHIP FOR A PERIOD OF ONE YEAR FROM THE DATE OF PURCHASE. THERE ARE NO OTHER EXPRESS OR IMPLIED WARRANTIES AND NO WARRANTY OF MERCHANTABILITY OR FITNESS FOR A PARTICULAR PURPOSE, OR OF NONINFRINGEMENT OF THIRD-PARTY RIGHTS (INCLUDING, BUT NOT LIMITED TO, COPYRIGHT AND PATENT RIGHTS).

LIMITATION OF LIABILITY:

IT IS UNDERSTOOD AND AGREED THAT DOLBY LABORATORIES' LIABILITY, WHETHER IN CONTRACT, IN TORT, UNDER ANY WARRANTY, IN NEGLIGENCE, OR OTHERWISE, SHALL NOT EXCEED THE COST OF REPAIR OR REPLACEMENT OF THE DEFECTIVE COMPONENTS OR ACCUSED INFRINGING DEVICES, AND UNDER NO CIRCUMSTANCES SHALL DOLBY LABORATORIES BE LIABLE FOR INCIDENTAL, SPECIAL, DIRECT, INDIRECT, OR CONSEQUENTIAL DAMAGES (INCLUDING, BUT NOT LIMITED TO, DAMAGE TO SOFTWARE OR RECORDED AUDIO OR VISUAL MATERIAL), COST OF DEFENSE, OR LOSS OF USE, REVENUE, OR PROFIT, EVEN IF DOLBY LABORATORIES OR ITS AGENTS HAVE BEEN ADVISED, ORALLY OR IN WRITING, OF THE POSSIBILITY OF SUCH DAMAGES.

Part Number 9110420
Issue 3

S10//21871/22797

Regulatory Notices

FCC

NOTE: This equipment has been tested and found to comply with the limits for a Class A digital device, pursuant to Part 15 of the FCC Rules. These limits are designed to provide reasonable protection against harmful interference when the equipment is operated in a commercial environment. This equipment generates, uses, and can radiate radio frequency energy and, if not installed and used in accordance with this instruction manual, may cause harmful interference to radio communications. Operation of this equipment in a residential area is likely to cause harmful interference in which case the user will be required to correct the interference at his own expense.

Canada

This Class A digital apparatus complies with Canadian ICES-003.

EMC

The Dolby® DSS200 and Dolby DSL100 comply with the EMC requirement of EN55022 and EN55024 when operated in accordance with this manual.

Important Safety Instructions

1. Read these instructions.
2. Keep these instructions.
3. Heed all warnings.
4. Follow all instructions.
5. Do not use this apparatus near water.
6. WARNING: To reduce the risk of fire or electric shock, do not expose this apparatus to rain or moisture.
7. Clean only with dry cloth.
8. Do not install near any heat sources such as radiators, heat registers, stoves, or other apparatus (including amplifiers) that produce heat.
9. No naked flame sources, such as lighted candles, should be placed on the apparatus
10. Protect the power cord from being walked on or pinched particularly at plugs, convenience receptacles, and the point where they exit from the apparatus.
11. Only use attachments/accessories specified by the manufacturer.
12. Unplug this apparatus when unused for long periods of time.
13. Refer all servicing to qualified service personnel. Servicing is required when the apparatus has been damaged in any way, such as power-supply cord or plug is damaged, liquid has been spilled or objects have fallen into the apparatus, the apparatus has been exposed to rain or moisture, does not operate normally, or has been dropped.
14. Do not expose the apparatus to dripping or splashing and no objects filled with liquids, such as vases, shall be placed on the apparatus.

15. CAUTION: Troubleshooting must be performed by a trained technician. To reduce the risk of electric shock, do not attempt to service this equipment unless you are qualified to do so.
16. Do not defeat the safety purpose of the polarized or grounding-type plug. A polarized plug has two blades with one wider than the other. A grounding-type plug has two blades and a third grounding prong. The wide blade or the third prong is provided for your safety. If the provided plug does not fit into your outlet, consult an electrician for replacement of the obsolete outlet.
17. This apparatus must be earthed (grounded) by connecting to a correctly wired and earthed power outlet.
18. Ensure that your mains supply is in the correct range for the input power requirement of the unit.
19. In order to reduce the risk of electrical shock, the power cord must be disconnected when the power supply assembly is removed.
20. This equipment is designed to mount in a suitably ventilated 19” rack; ensure that any ventilation slots in the unit are not blocked or covered.
21. The mains power disconnect device for this unit is the plug-in mains cord rather than a power switch. The mains cord must remain readily accessible for disconnecting mains power.
22. To avoid exposure to dangerous voltages and to avoid damage to the unit, do not connect the rear-panel Ethernet port to telephone circuits.
23. As the colors of the cores in the mains lead may not correspond with the colored markings identifying the terminals in your plug, proceed as follows:
    - The green and yellow core must be connected to the terminal in the plug identified by the letter E, or by the earth symbol ⏚, or colored green, or green and yellow.
    - The blue core must be connected to the terminal marked with the letter N or colored black.
    - The brown core must be connected to the terminal marked with the letter L or colored red.
24. This apparatus must be earthed.

CAUTION – Danger of explosion if battery is incorrectly replaced. Replace only with the same or equivalent type. Dispose of used batteries according to local law.

PRODUCT END-OF-LIFE INFORMATION

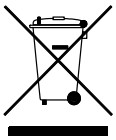

This product was designed and built by Dolby Laboratories to provide many years of service, and is backed by our commitment to provide high-quality support. When it eventually reaches the end of its serviceable life, it should be disposed of in accordance with local or national legislation. For current information please visit our website: www.dolby.com/environment.

This symbol that appears on the unit rear panel is intended to alert the user to the presence of uninsulated “dangerous” voltage within the product’s enclosure that maybe of sufficient magnitude to constitute a risk of electric shock to persons.

This symbol is intended to alert the user to the presence of important safety operating and maintenance instructions.

IMPORTANT SAFETY NOTICE

These units comply with safety standard EN60950-1. These units shall not be exposed to dripping or splashing and no objects filled with liquids, such as coffee cups, shall be placed on the equipment. To ensure safe operation and to guard against potential shock hazard or risk of fire, the following **must** be observed:

- Ensure that your mains supply is in the correct range for the input power requirement of the unit.
- Ensure **fuses** fitted are the **correct rating and type** as marked on the unit.
- The unit **must be earthed** by connecting to a correctly wired and **earthed** power outlet.
- The **power cord** supplied with this unit must be wired as follows:

Live—Brown Neutral—Blue Earth—Green/Yellow

GB

IMPORTANT – NOTE DE SECURITE

Ces unités se conformer à la norme de sécurité EN60950-1. Ne pas exposer ces appareils aux éclaboussures ou aux gouttes de liquide. Ne pas poser d'objets remplis de liquide, tels que des tasses de café, sur l'appareil. Pour vous assurer d'un fonctionnement sans danger et de prévenir tout choc électrique ou tout risque d'incendie, veillez à observer les recommandations suivantes.

- Le selecteur de tension doit être placé sur la valeur correspondante à votre alimentation réseau.
- Les fusibles doivent correspondre à la valeur indiquée sur le materiel.
- Le materiel doit être correctement relié à la terre.
- Le cordon secteur livré avec le materiel doit être cablé de la manière suivante:

Phase—Brun Neutre—Bleu Terre—Vert/Jaune

F

WICHTIGER SICHERHEITSHINWEIS

Diese Geräte erfüllen die Sicherheitsnorm EN60950-1. Die Geräte darf nicht mit Flüssigkeiten (Spritzwasser usw.) in Berührung kommen; stellen Sie keine Gefäße, z.B. Kaffeetassen, auf die Geräte. Für das sichere Funktionieren der Geräte und zur Unfallverhütung (elektrischer Schlag, Feuer) sind die folgenden Regeln unbedingt einzuhalten:

- Der Spannungswähler muß auf Ihre Netzspannung eingestellt sein.
- Die Sicherungen müssen in Typ und Stromwert mit den Angaben auf dem Gerät übereinstimmen.
- Die Erdung des Gerätes muß über eine geerdete Steckdose gewährleistet sein.
- Das mitgelieferte Netzkabel muß wie folgt verdrahtet werden:

Phase—braun Nulleiter—blau Erde—grün/gelb

D

NORME DI SICUREZZA – IMPORTANTE

Queste unità sono costruiti a norma di sicurezza EN60950-1. I prodotti non deve essere sottoposto a schizzi, spruzzi e gocciolamenti, e nessun tipo di oggetto riempito con liquidi, come ad esempio tazze di caffè, deve essere appoggiato sul dispositivo. Per una perfetta sicurezza ed al fine di evitare eventuali rischi di scossa êlettrica o d'incendio vanno osservate le seguenti misure di sicurezza:

- Assicurarsi che il selettore di cambio tensione sia posizionato sul valore corretto.
- Assicurarsi che la portata ed il tipo di fusibili siano quelli prescritti dalla casa costruttrice.
- L'apparecchiatura deve avere un collegamento di messa a terra ben eseguito; anche la connessione rete deve avere un collegamento a terra.
- Il cavo di alimentazione a corredo dell'apparecchiatura deve essere collegato come segue:

Filo tensione—Marrone Neutro—Blu Massa—Verde/Giallo

I

AVISO IMPORTANTE DE SEGURIDAD

Estas unidades cumplen con la norma de seguridad EN60950-1. Estas unidades no debe ser expuesta a goteos o salpicaduras y no deben colocarse sobre el equipo recipientes con liquidos, como tazas de cafe. Para asegurarse un funcionamiento seguro y prevenir cualquier posible peligro de descarga o riesgo de incendio, se han de observar las siguientes precauciones:

- Asegúrese que el selector de tensión esté ajustado a la tensión correcta para su alimentación.
- Asegúrese que los fusibles colocados son del tipo y valor correctos, tal como se marca en la unidad.
- La unidad debe ser puesta a tierra, conectándola a un conector de red correctamente cableado y puesto a tierra.
- El cable de red suministrado con esta unidad, debe ser cableado como sigue:

Vivo—Marrón Neutro—Azul Tierra—Verde/Amarillo

E

VIKTIGA SÄKERHETSÅTGÄRDER!

Dessa enheter uppfyller säkerhetsstandarden EN60950-1. Dessa enheter får inte utsättas för yttre åverkan samt föremål innehållande vätska, såsom kaffemuggar, får ej placeras på utrustningen. För att garantera säkerheten och gardera mot eventuell elchock eller brandrisk, måste följande observeras:

- Kontrollera att spänningsväljaren är inställd på korrekt nätspänning.
- Konrollera att säkringarna är av rätt typ och för rätt strömstyrka så som anvisningarna på enheten föreskriver.
- Enheten måste vara jordad genom anslutning till ett korrekt kopplat och jordat el-uttag.
- El-sladden som medföljer denna enhet måste kopplas enligt foljande:

Fas—Brun Neutral—Blå Jord—Grön/Gul

S

BELANGRIJK VEILIGHEIDS-VOORSCHRIFT:

Deze eenheden voldoen aan de EN60950-1. Deze apparaten mag niet worden blootgesteld aan vocht. Vanwege het risico dat er druppels in het apparaat vallen, dient u er geen vloeistoffen in bekers op te plaatsen. Voor een veilig gebruik en om het gevaar van electrische schokken en het risico van brand te vermijden, dienen de volgende regels in acht te worden genomen:

- Controleer of de spanningscaroussel op het juiste Voltage staat.
- Gebruik alleen zekeringen van de aangegeven typen en waarden.
- Aansluiting van de unit alleen aan een geaarde wandcontactdoos.
- De netkabel die met de unit wordt geleverd, moet als volgt worden aangesloten:

Fase—Bruin Nul—Blauw Aarde—Groen/Geel

NL

Table of Contents

List of Figures

Introduction

Welcome to Dolby® Digital Cinema!

The Dolby Digital Cinema presentation system is a direct result of Dolby Laboratories' continued leadership in the development of innovative cinema technologies. Dolby Digital Cinema provides a flexible system designed to deliver the best possible cinema experience. In creating this new system, Dolby utilized its vast experience with production and exhibition, processing systems, and cinema equipment design. Designed from the ground up, Dolby Digital Cinema serves the exhibition and production communities equally well, ensuring that the cinema continues to provide the optimum environment for experiencing the director's vision. Building on the company's unique experience as a pioneer in entertainment technologies and as a leading supplier of cinema audio equipment, Dolby Digital Cinema provides reliability, flexibility of operation, adaptability for the future, and system security. Containing both image and sound components, it incorporates the open standards specified by Digital Cinema Initiatives (DCI) and SMPTE.

A Dolby Digital Cinema network consists of the following components:

- Dolby DSS200 streaming server and secure digital content decoder
- Dolby Show Library (DSL100) high-capacity storage server (for multiplex installations)
- Dolby DMA8Plus Digital Media Adapter coupled with an existing cinema sound processor or a Dolby CP650 or CP750 Digital Cinema Processor
- Dolby Theatre Management System (TMS) software
- User-provided 1000Base-T Ethernet switches
- User-provided USB keyboard, USB mouse, and computer monitor (minimum 1,024 × 768 resolution at 60 Hz)
- User-provided digital cinema projector
- Optional automation interface (Dolby NA10 or external third-party controller [using ASCII over RS-232 or GPI/O]).

Note: Dolby 3D Digital Cinema systems may also include a Dolby DFC100. For more information on the DFC100, see the documentation included with that product.

1.1 Dolby Digital Cinema Network Overview

Figure 1-1 shows a typical Dolby Digital Cinema auditorium network. This configuration uses a DSL100 storage server to load content at one central location. The DSS200 in auditorium 1 receives encrypted and encoded content from the DSL100. The DSS200 in each auditorium can receive content from the DSL100 (or any other networked Dolby server). The TMS Client monitors and controls the entire theatre complex.

The DSL100 runs the TMS Server, while the TMS Client is accessible from any Dolby DSS200, DSL100, or any networked PC. The TMS Server can also run on a single DSS200 and network up to three screens (without a DSL100). If a DSS200 is operating as a single-screen stand-alone system, the software runs in Screen Management System (SMS) mode.

Dolby TheatreSync

With Dolby TheatreSync, when you change a setting using the TMS, it synchronizes with the SMS, even if you disconnect the server. If the TMS is unavailable, the user interface automatically switches to SMS mode, providing local control. When you create or edit a show using the SMS (when disconnected from the TMS or in stand-alone mode), the changes automatically synchronize with the TMS when you reconnect it. This functionality also simplifies hardware replacement (including replacement or installation of the Dolby Show Library), as the entire network serves as a redundant source for show and schedule information. As a result, Dolby TheatreSync allows you to run your Digital Cinema System according to your needs, instead of locking the system into a single mode of operation.

For complete details on the TMS software, please refer to the TMS online help system. The following chapters in this manual show you how to install and maintain a Dolby Digital Cinema system. Incremental updates to this manual are posted on the DolbySecure web site. Contact your authorized Dolby technical representative for information on accessing this site.

The system is compatible with all cinema processors and addresses the CP650 and CP750 directly through Ethernet automation and digital audio interfaces. Other cinema processors require a DMA8Plus, as shown in Figure 1-1. You can automate the DMA8Plus controls through Ethernet automation.

Note: Dolby 3D Digital Cinema networks may include a Dolby DFC100 (not shown in Figure 1-1), which must also connect to the auditorium switch.

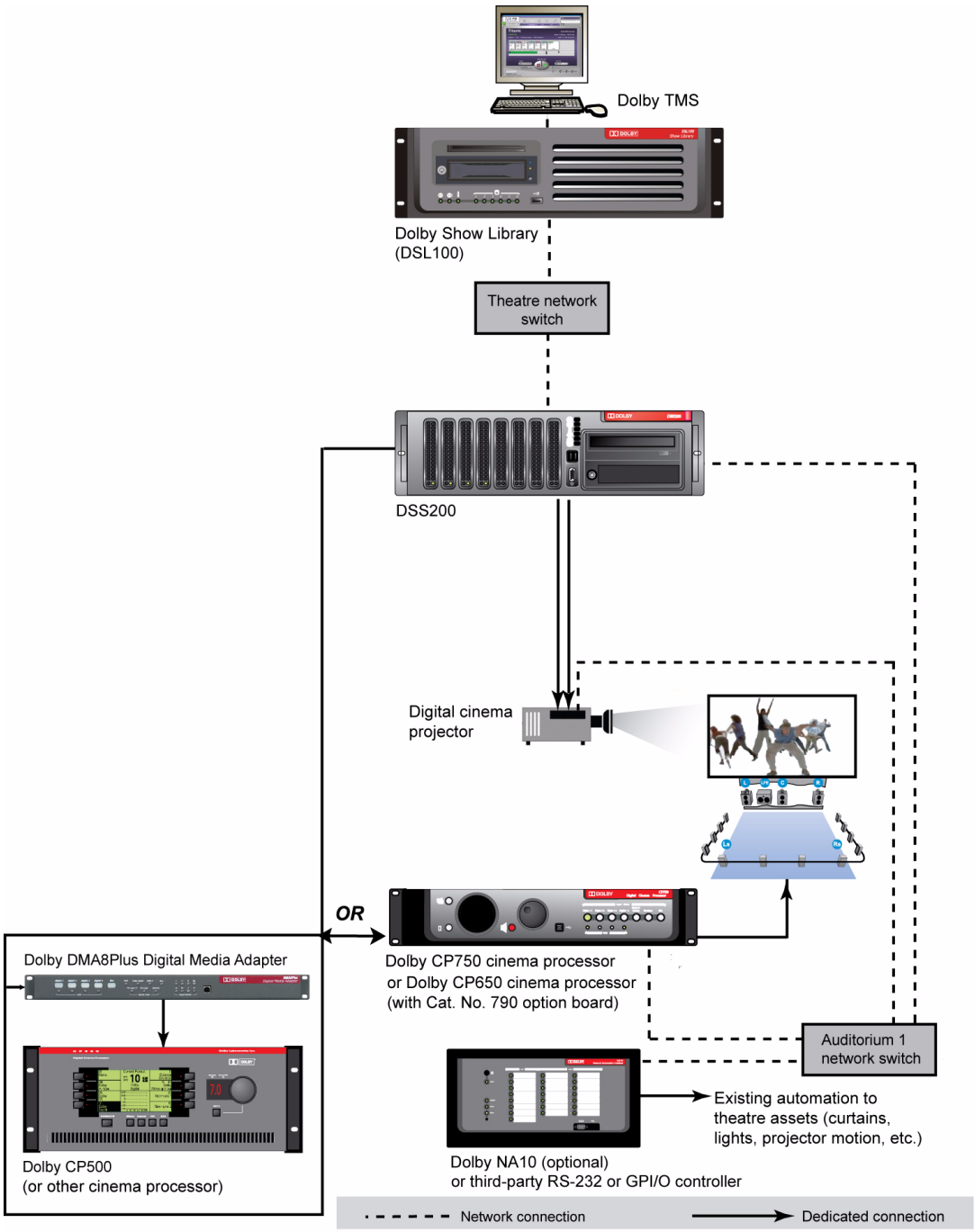

Figure 1-1 Dolby Digital Cinema Auditorium Network

DSS200 and DSL100

The Dolby® DSS200 and Dolby Show Library (DSL100) are the core components of the Dolby Digital Cinema presentation system. The DSS200 reads audio and video content files, decrypts and decodes this content, and reencrypts the video. The DSS200 then sends the link-encrypted video to the local auditorium's digital cinema projector for decryption and playback on the associated screen. The DSS200 sends the audio portion of the bitstream to a Dolby DMA8Plus Digital Media Adapter and existing cinema processor or directly to a Dolby CP650 (equipped with a Cat. No. 790 option card) or a Dolby CP750 for playback through the local auditorium's existing amplifiers and loudspeakers. The DSL100 is a high-capacity storage server that facilitates multiplex networking and optimizes content storage requirements. With the DSL100, you can load all content at one central location using removable hard drives, USB 2.0 drives, DVDs, or network FTP. The unit distributes files electronically to all networked Dolby Digital Cinema systems within the multiplex. The DSL100 plays a key role in managing a theatre's Ethernet-based equipment, and opens a gateway to each auditorium. The DSL100 is required for configurations with four or more auditoriums.

To play a show on a specific screen, the DSS200 connects to an auditorium network through that network's Ethernet switch. This switch does not connect to old cinema processors. It interfaces with the auditorium network's Dolby DMA8Plus Digital Media Adapter or a Dolby CP650 or CP750 cinema processor, the auditorium's digital cinema projector, and the optional Dolby NA10 (or other theatre automation connection using ASCII over RS-232). This connection allows the DSS200 to manage the auditorium's Ethernet-based equipment and its theatre assets (curtains, lights, and so on).

The DSL100 links all the auditoriums together through a 1000Base-T Ethernet theatre backbone switch. In a multiscreen complex, all the DSS200s (installed in each of the other auditoriums) also connect to this switch. Connecting to the theatre network enables the routing of shows and content to the DSS200 in each auditorium. A show contains the sequence of content clips to play along with event cues that trigger the auditorium's theatre assets.

The Dolby TMS software provides monitoring and control across the entire theatre network. The TMS Server is a central application. The Server runs on a DSL100 (or properly configured DSS200 for three or fewer auditoriums). The database runs on a Dolby DSL100 (or a similarly configured DSS200 for three or less auditoriums). The TMS Client provides a user interface to control a Dolby Digital Cinema system. The Client runs on the Show Library, any DSS200 on the network, and remote PCs. This allows authorized users to monitor the status of each auditorium, control playback, build shows, and set up schedules from a remote location (for example, the manager's office).

This manual shows you how to install and maintain the DSS200 and DSL100 in single-screen and multiscreen environments. For end-user operating instructions, please refer to the TMS online help.

2.1 DSS200 Front and Rear Panels

The DSS200 is shown in Figure 2-1 with the front-panel cover on and Figure 2-2 with the front-panel cover off. The unit is shipped with the front-panel cover off. We recommend installing the cover after installing the unit in its rack, as described Section 3.3.3.

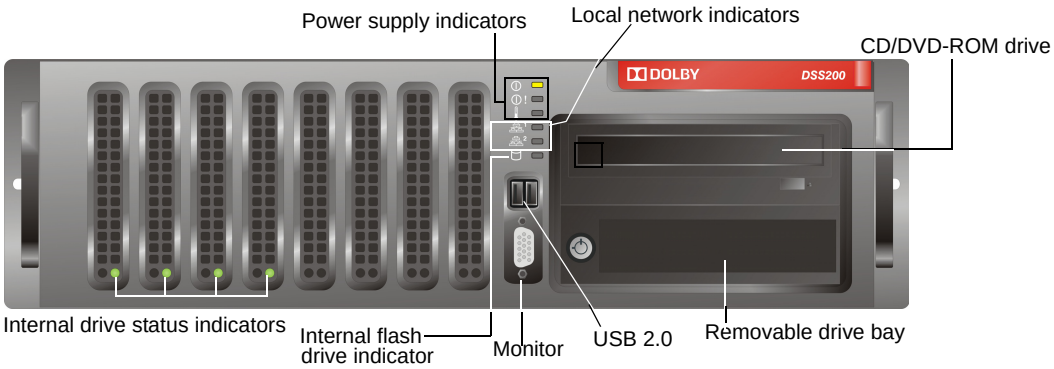

Figure 2-1 DSS200 Front Panel with Cover On

Note: You cannot play commercial CDs/DVDs in the DSS200's CD/DVD-ROM drive.

When you remove the front-panel cover (as described in Section 4.1.1) the red drive tray buttons and a power button are exposed, as shown in Figure 2-2.

If you need to power down the unit, insert a nonconductive material, such as a toothpick into the recessed power button area. There is no need to confirm this action or shut down the system first. It is normal for the second (lower) local network LED to remain on if the main power cables are connected. In addition, the power supply fans continue to run. To restore power to the unit and begin the boot sequence, press the power button again. Press a drive tray button to release the handle for the respective drive during drive replacement, as described in Section 4.1.1.

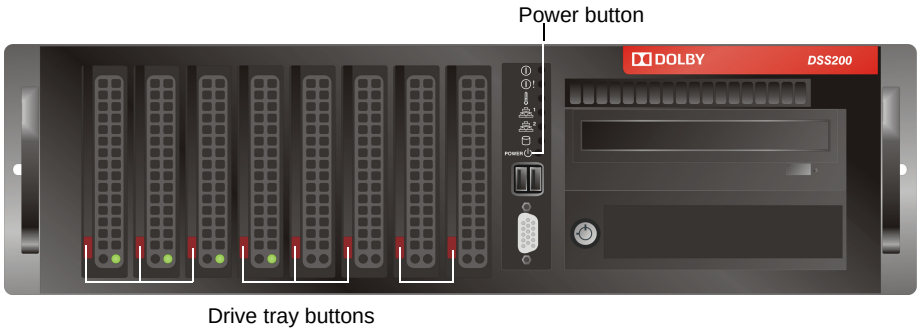

Figure 2-2 DSS200 Front Panel with Cover Off

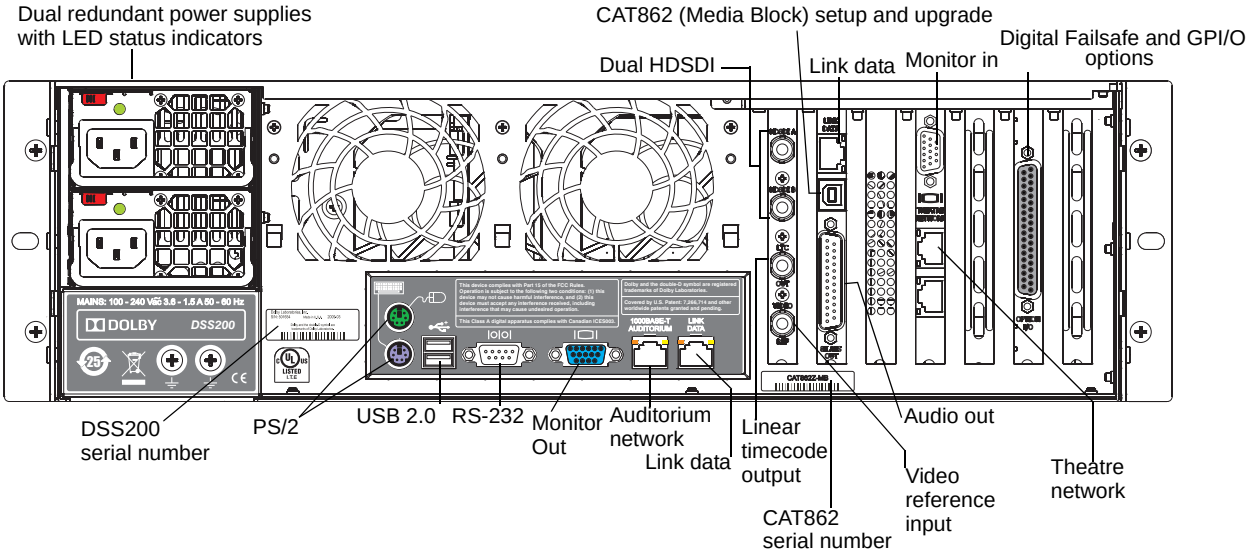

Figure 2-3 DSS200 Rear Panel

2.2 DSL100 Front and Rear Panels

The DSL100 front and rear panels are shown in Figure 2-4 and Figure 2-5.

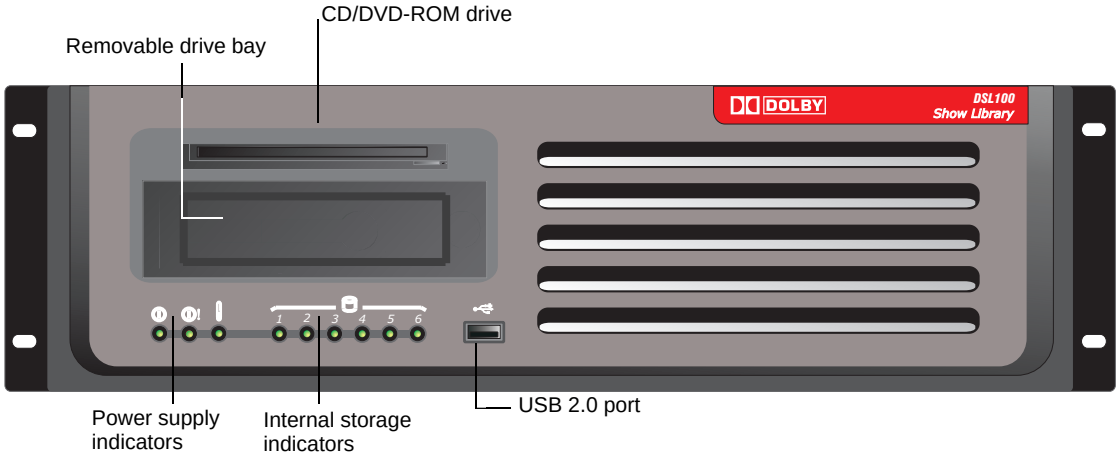

Figure 2-4 DSL100 Front-Panel Components

Note: You cannot play commercial CDs/DVDs in the DSL100's CD/DVD-ROM drive.

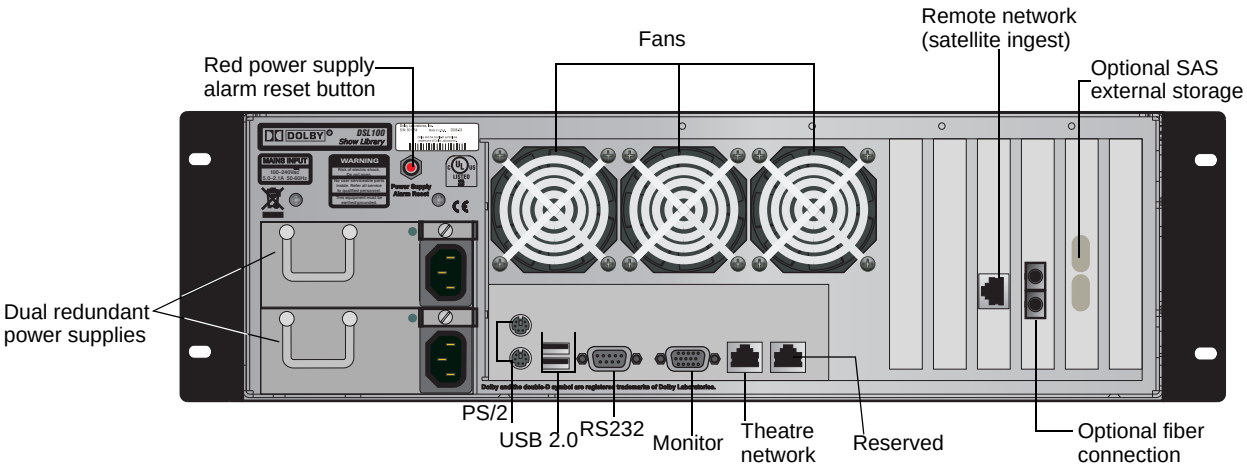

Figure 2-5 DSL100 Rear-Panel Components

2.3 DSS200 and DSL100 Removable Drive Bay

The removable drive bay allows you to load content and licenses on the DSS200 and the DSL100 using TMS. It is hot-pluggable, and you can insert a drive at any time (with the power on or off), but do not remove it during the content loading process (indicated by a flashing drive icon in Dolby TMS, and when the drive's amber activity LED flashes). See the illustration in Figure 2-6. For information on TMS, see the online help system.

To insert a removable drive with the system powered up:

1. Push on the drive's handle to pivot it outward.
2. Line up the drive with its slot and slide it in.
3. Push on the drive's handle to seat the drive in place.

   On the DSS200, the blue drive-ready LED starts blinking. When the drive-ready LED glows in solid blue, you are ready to load content.

   On the DSL100, press and hold the power button until the drive ready-LED stops blinking and glows in solid blue. You are now ready to load content.

   If the drive is inserted, but the system is not powered up, the drive automatically powers up (the drive-ready LED glows in solid blue) when the system boots up. If the drive-ready LED is not lit, push and hold the power button for three seconds.

Caution: If the drive-ready LED flashes red and blue, this indicates a fan failure. The fan-error LED disable switch allows you to disable the drive-ready-LED when it flashes red and blue. Insert a paperclip or similar object to activate this switch and stop the flashing. Return the unit to the drive supplier as soon as possible for a fan replacement

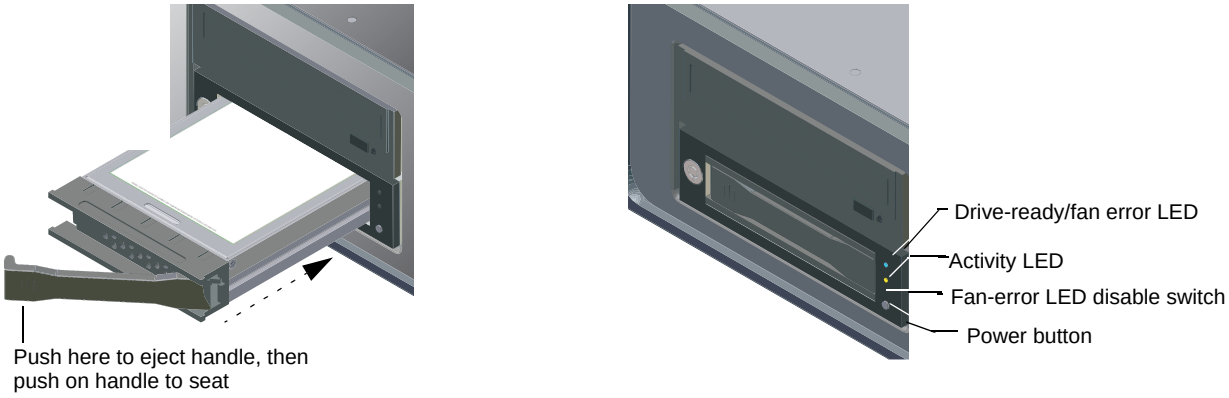

Figure 2-6 Inserting a Removable Drive

To remove the drive:

1. Wait until the amber activity LED stops flashing, then press and hold the power button until the blue drive-ready LED turns off.
2. Push on the top left corner of the drive handle to pivot the handle outward, then pull on the handle to remove the drive.

Caution: During the content loading process, a flashing drive icon appears in Dolby TMS and the drive's amber activity LED flashes. Do not remove the drive at this time. When the flashing stops, press the power button to power down the drive before removing it.

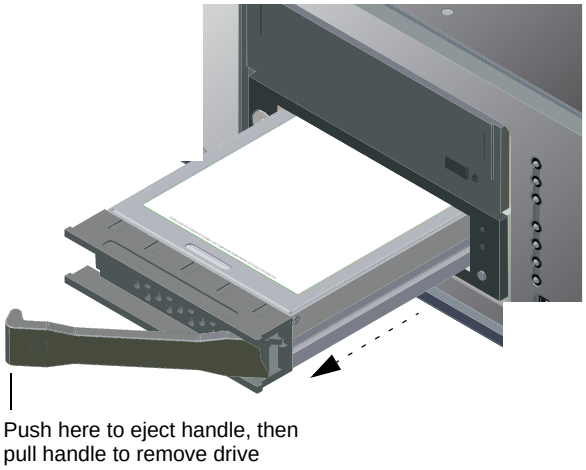

Figure 2-7 Ejecting a Removable Drive

2.4 Using FTP to Upload and Download Content and Licenses

You can use the DSS200 or the DSL100 to connect to an outside FTP server to transfer content or licenses. Using any FTP client, you can copy content in or out of the system. You can do this by using standard `get` and `put` commands. To use FTP to move content:

1. Launch an FTP client on the remote system.
2. Connect to your DSS200 or DSL100 by entering its IP address.
3. Log in using the following login information.

   user: dolbyftp
   password: dolbyftp

   The normal FTP feedback appears. You are automatically placed in the proper directory to copy content or licenses to or from the unit.

4. Copy the desired content or licenses in or out of the DSS200 or DSL100.

   You can also use the FTP `delete` command to delete content from the system.

   You can check the listing after each file upload to see if the file was deleted or not, which verifies whether it was valid content. The system deletes all invalid content.

Installing a Dolby Digital Cinema System

This chapter provides instructions for installing a Dolby® Digital Cinema system. You begin by registering each DSS200 and its CAT862 decoder (also referred to in this manual as the Media Block), preparing for the installation, and installing the hardware in each auditorium. If a theatre has only one screen, these instructions are all you need to install the hardware.

In a multiple auditorium environment, if you're installing Dolby Digital Cinema systems in two or more auditoriums, follow the registration and hardware instructions in each auditorium, then go to Section 3.4 for additional instructions.

After you install the hardware, go to Section 3.6 to complete the installation.

3.1 Register the CAT862 Decoders

Before setting up the system for the first time, you need to register each DSS200 and its CAT862 decoder (Media Block) by entering their respective serial numbers in the *Dolby Digital Cinema Installation Submission Form* (see Figure 3-1) along with the other required information. You can find these serial numbers on the DSS200 rear panel, as shown in Figure 2-3. Be sure to enter both serial numbers. The electronic submission form is provided on the *DSS200 Documentation* CD and requires Adobe® Acrobat® Reader® 7 or later. Always enter all the required information (electronically) in the provided fields, then email the information to the appropriate Dolby location following the instructions on the form. Once Dolby sends an email confirmation, the respective DSS200 and its CAT862 is valid for a specific theatre. This enables authorized users to obtain content licenses for that unit, load those licenses on the system, and play back the corresponding content. For instructions on obtaining licenses and loading them using Dolby TMS, see the Dolby TMS online help. For instructions on obtaining and loading licenses using a USB modem, see page 42 and page 54.

Caution: You cannot use a Dolby Digital Cinema system to play encrypted content until you register each DSS200's CAT862. Registration activates the respective DSS200s for playback. Be sure to enter this 51xxxx series serial number (xxxx = your unit's unique ID).

Dolby Digital Cinema Installation Submission Form

DOLBY

Each Dolby® Digital Cinema system requires a unique license or security key to enable playback for every piece of content. Submit this form to Dolby, once for each screen in your theatre, as soon as possible to ensure that you receive the correct licenses for your screens.

Electronic submission of this form requires an Internet connection and email capability (to send an email with an XML file attachment). You can also fill out the form, print it, and fax it to the attention of Technical Support at Dolby Laboratories at **(415) 645-4000** (the Americas, Korea, and Japan) or **(44) 1793-842101** (for the rest of the world).

Submission using an email client (such as Microsoft Outlook): Fill out the form, and follow the onscreen instructions, as the document uses your system to send the email. If you are working offline, the email will be saved in your outbox and delivered when you are back online. In most client software, this action can also be manually prompted.

Submission using a webmail account (such as Hotmail): Fill out the form, then follow the onscreen instructions. You will be prompted to save the data as an XML file. When you connect to your webmail account, create a new email and attach the XML file. Send the email to CinemaSupport@dolby.com (the Americas, Korea, and Japan) or service@dolby.co.uk (for the rest of the world).

Note: This form requires Adobe® Acrobat® Reader 7 to send data via email. If you are using an earlier version of Acrobat, you will only be able to fill out and print the form.

*** Denotes required information.**

Cinema Information

Cinema Circuit*

Cinema Name*

Address 1*

Address 2

No. of Screens*

City*

County or Province or State*

Country*

Postal Code/Zip*

Contact Information

First Name*

Last Name*

Email Address*

Telephone *

Screen Information

Screen No.*

Number of Seats

3D Type None

DSP100/CAT862 Serial No.*

DSS100/200 Serial No.*

Screen Type White

Screen Gain

Screen Height

Screen Width Flat

Screen Width Scope

Throw Distance

Projector Information

Projector Make*

Projector Serial No.*

Projector Model*

Projector Lens Size

Submit for the Americas, Korea, and Japan | Submit for the rest of the world (ROW) | Print Form

Dolby Laboratories, Inc.
US 100 Potrero Avenue, San Francisco, CA 94103-4813 Telephone 415-558-0200 Fax 415-863-1373
UK Wootton Bassett, Wiltshire SN4 8QJ Telephone (44) 1793-842100 Fax (44) 1793-842101

For US technical inquiries, contact CinemaSupport@dolby.com.
For UK technical inquiries, contact service@dolby.co.uk.

Figure 3-1 Dolby Digital Cinema Installation Submission Form

3.2 Prepare for an Installation

After registering the DSS200 CAT862, be sure you have the following components before you begin the installation:

1. Dolby DSS200
2. Dolby DSL100 (required for configurations with four or more auditoriums)
3. Computer monitor (minimum 1,024 × 768 resolution at 60 Hz)
4. USB keyboard and USB mouse
5. Dolby CP750 Digital Cinema Processor (or a Dolby CP650 Digital Cinema Processor (with Cat. No. 790 card and software v. 2.3.4.4 or later), or a Dolby DMA8Plus Digital Media Adapter and a cinema sound processor
6. Dolby DSS200 Packing Kit (DSS200Z-PK), which includes the following items:
   - Mains cable, US
   - Mains cable, international
   - One 12-inch Ethernet cable
   - One 12-inch monitor male to monitor female cable
   - Four rack rails and mounting screws
   - Front-panel cover
   - *Dolby DSS200 Documentation* disc
7. Optional Dolby Digital Cinema Installation Kit (Cat. No. 899-DMA8 for the DMA8Plus and the CP750, or Cat. No. 899-DSS200/650 for the CP650), which includes the following (or the equivalent user-provided) items:
   - Two 15-foot CAT5e red Ethernet cables
   - One three-foot CAT5e blue Ethernet cable
   - One seven-foot CAT5e blue Ethernet cable
   - One 50-foot CAT5e blue Ethernet cable
   - One six-foot black USB cable
   - One 50-foot green HD-SDI video cable
   - One 50-foot red HD-SDI video cable
   - One DMA8Plus or CP750 to DSS200 six-foot 4 x AES cable (Cat. No. 899-DMA8 kit only)
   - One CP650 to DSS200 12-foot 4 x AES cable (Cat. No. 899-DSS200/650 kit only)
   - Gigabit Ethernet switch
   - Mains cable, international
8. For systems that require a DSL100, the Dolby DSL100 Packing Kit (DSL100Z-PK), which includes the following items:
   - Mains cable, US
   - Mains cable, international

Caution: When you unpack a DSS200, be sure the internal hard drives (located behind the front panel) are seated in their slots. For instructions on removing the DSS200 front panel and accessing an internal drive, please see Section 4.1.1.

3.3 Installing the Hardware in a Single Auditorium

This section shows you how to install the Dolby Digital Cinema hardware in a single auditorium.

3.3.1 Unpacking the System

You should inspect the DSS200 and its shipping package and contact Dolby immediately if you find any damage.

Identify a suitable location for the rack unit that will hold the DSS200. It should be situated in a clean, dust-free area that is well ventilated. Avoid areas where heat, electrical noise and electromagnetic fields are generated. You will also need to place it near a grounded power outlet. Read all of the precautions listed in Section 3.3.2.

3.3.2 Preparing for Setup

The DSS200 shipping package includes one set of rail assemblies (two inner and two outer) and the mounting screws you will need to install the system into the rack. Read the following sections completely, before you begin the installation procedure in the sections that follow.

The DSS200 ships with a front-panel cover that you should install *after* installing the unit in its rack, as described on page 20.

Choosing a Setup Location

Leave approximately 30 inches of clearance in the back of the rack to allow for sufficient airflow and ease in servicing.

Rack Precautions

Be sure to take these precautions when installing the rack:

- Ensure that the leveling jacks on the bottom of the rack are fully extended to the floor with the full weight of the rack resting on them.
- In a single-rack installation, attach stabilizers to the rack.
- In multiple-rack installations, couple the racks together.
- Before extending a component from the rack be sure the rack is stable.
- Extend only one component at a time: extending two or more simultaneously may cause the rack to become unstable.

General Component Precautions

Be sure to take these precautions when installing all components in the rack:

- Review the electrical and general safety precautions.
- Identify the placement of each component in the rack before you install the rails.
- Install the heaviest rack components on the bottom of the rack first, and then work up.
- Use a regulating uninterruptible power supply (UPS) to help protect the all components from power surges and voltage spikes, and to keep your system operating in case of a power failure.
- Allow the hot-plugable hard drives and power supply modules to cool before touching them.
- Close all panels, all components, and rack door (if present) when not servicing, to maintain proper cooling.

Rack-Mounting Considerations

Be sure to consider the following when installing the rack.

Ambient Operating Temperature

If installed in a closed or multiunit rack assembly, the ambient operating temperature of the rack environment may be greater than the ambient temperature of the room. Therefore, consideration should be given to installing the equipment in an environment compatible with the manufacturer's maximum rated ambient temperature.

Reduced Airflow

Equipment should be mounted into a rack so that the amount of airflow required for safe operation is not compromised.

Mechanical Loading

Equipment should be mounted into a rack so that a hazardous condition does not arise due to uneven mechanical loading.

Circuit Overloading

Consideration should be given to the connection of the equipment to the power supply circuitry and the effect that any possible overloading of circuits might have on over-current protection and power supply wiring. Appropriate consideration of equipment name-plate ratings should be used when addressing this concern.

Reliable Ground

A reliable ground must be maintained at all times. To ensure this, the rack itself should be grounded. Particular attention should be given to power supply connections other than the direct connections to the branch circuit (such as the use of power strips, and so on.).

3.3.3 Installing the DSS200 in a Rack

Following are instructions for installing the DSS200 into its rack. The DSS200 ships with a front-panel cover that you should install *after* installing the unit in its rack, as described in Installing the Front-Panel Cover on page 18.

There are several types of racks available, which may require slight variations in the installation procedure. You should also refer to the installation instructions provided with your rack.

Note: You can install the small quick-release rails in racks that are 26 to 33.5 inches deep. If your rack does not have square holes, you'll need to install the included adapter.

There are two rail assemblies provided for the quick-release rack rails. Each assembly consists of two sections, an inner fixed chassis rail that secures directly to the DSS200 and an outer fixed rack rail that secures directly to the rack itself.

To install the quick-release rails:

1. Separate the inner and outer rails on each assembly (refer to Figure 3-2).
   - Extend the rail assembly by pulling it outward.
   - Press the quick-release tab.
   - Separate the inner rail extension from the outer rail assembly.

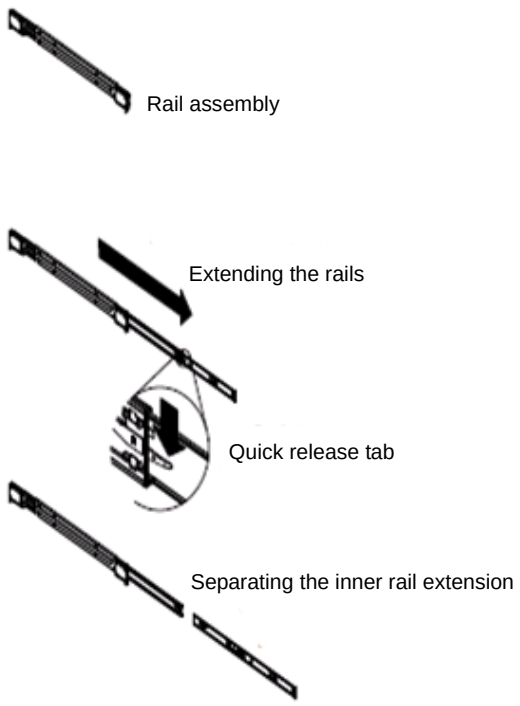

Figure 3-2 Separating the Small Quick-Release Rails

2. Install the inner rail extensions (refer to Figure 3-3.
   - Place the inner rack extensions on each side of the DSS200 chassis, aligning the hooks of the DSS200 chassis with the rail extension holes.

- Be sure each extension faces outward just like the inner rail.
- Slide the first extension toward the front of the DSS200 chassis.
- Secure the inner rail to the DSS200 chassis with the four provided screws, as shown in Figure 3-3. Repeat these steps for the other inner rail.

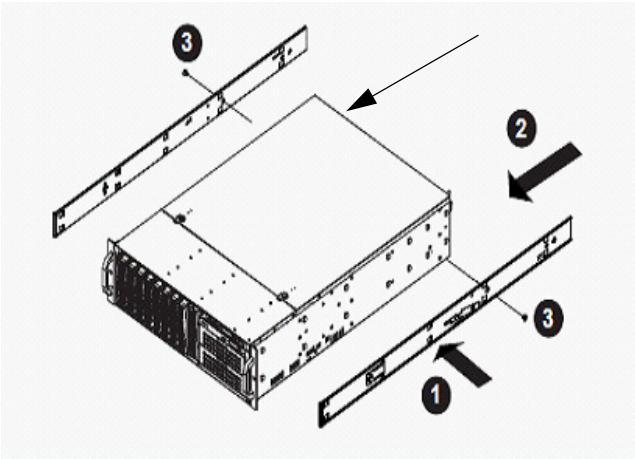

Figure 3-3 Installing the Inner Rail Extensions On the Small Rails

3. Assemble the outer rack rails. (The outer rails extend from 30 to 33 inches and attach to the rack.)
   - Secure the back end of the outer rail to the rack, using the provided screws.
   - To retract the smaller outer rail, press the button where the two outer rails join.
   - Hang the rail hooks on the rack holes, and if desired, use the provided screws to secure the front of the outer rail to the rack.
   - Repeat steps 1–3 for the other outer rail.

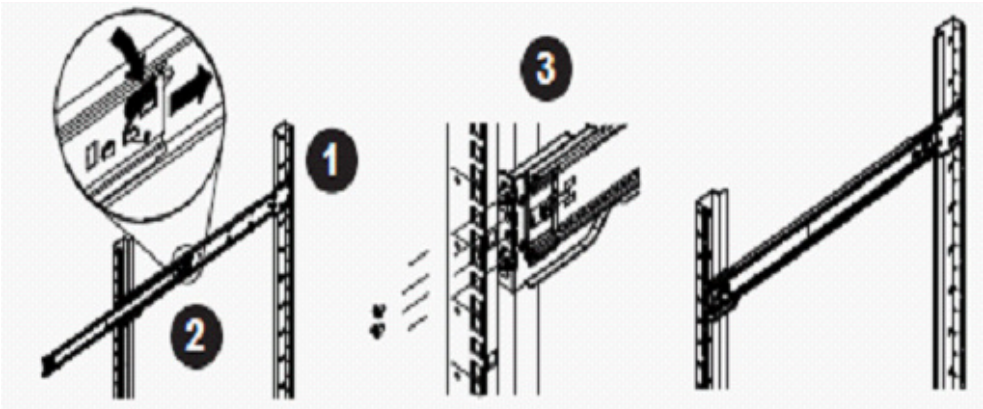

Figure 3-4 Assembling the Outer Small Rails

4. Install the DSS200 into the rack.
   - Confirm that the inner and outer rails are installed on the rack.
   - Extend the outer rails.
   - Align the inner rails on the DSS200 with the outer rails on the rack.
   - Slide the inner rails into the outer rails, maintaining equal pressure on both sides. When the DSS200 is completely inserted into the rack, it should click into the locked position.
   - Optionally, insert and tighten the thumbscrews that secure the front of the DSS200 to the rack.

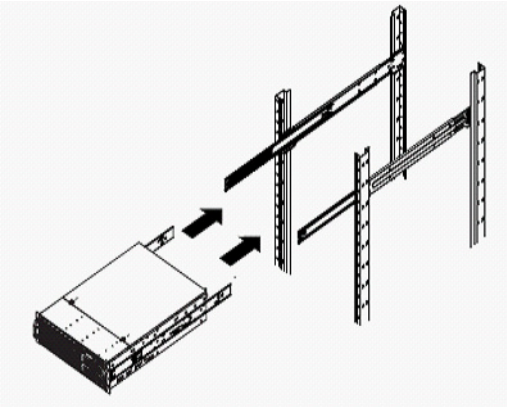

Figure 3-5 Installing the DSS200 in the Rack Using the Small Rails

Installing the Front-Panel Cover

After installing the DSS200 in its rack, install the unit's front-panel cover:

1. Line up the two pins on the cover's left side with their respective holes on the front panel, then insert the pins in the holes.
2. Place a finger on the cover's upper right indent, press inward to depress the two pins on the right side, line up the pins with their respective holes, then release your finger to insert the pins and snap the cover in place (see Figure 3-6).

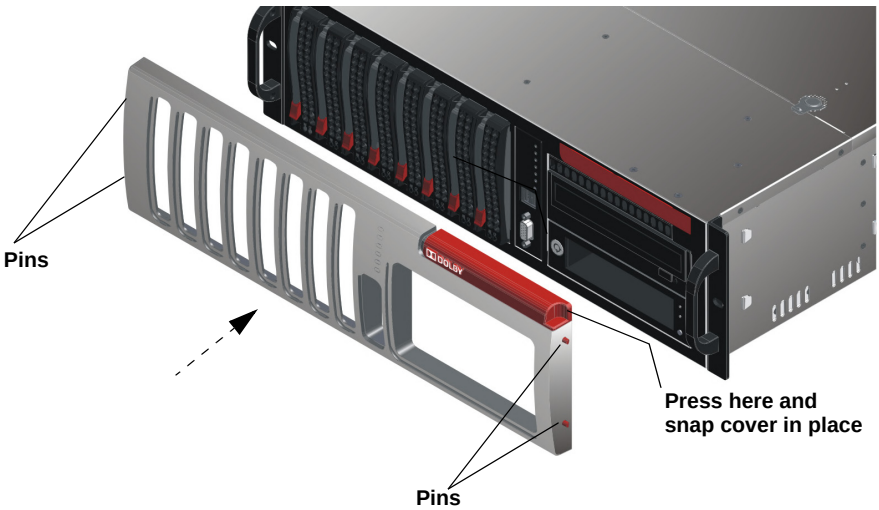

Figure 3-6 Install Front-Panel Cover

3. Connect all cables and configure the system, as described in the following sections.

3.3.4 Additional Recommendations

All of the units vent from front to back—be sure to provide proper clearance, and unobstructed air flow. Do not install the units above heat-generating equipment. The DMA8Plus should be mounted in the same rack as the cinema processor to avoid potential problems with ground loops, radiated interference, and so on.

We recommend that you install star washers on all cinema processor or DMA8Plus rack-mounting screws to ensure good ground contact, as shown in the example in Figure 3-7 . This helps prevent electrical noise problems.

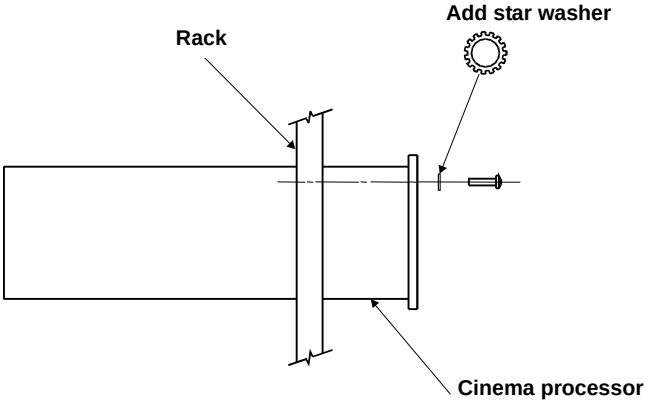

Figure 3-7 Use Star Washers on Cinema Processor Rack-Mounting Screws

Note: Follow all local codes and regulations covering electrical wiring.

3.3.5 Interconnect DSS200 Link Data Ports

To enable the routing of content and shows, you need to interconnect the two **LINK DATA** Ethernet ports on the DSS200 rear panel as follows:

Connect one end of the provided CAT5e Ethernet cable to one of the DSS200's **LINK DATA** ports, then connect the other end of the cable to the other **LINK DATA** port, as shown in Figure 3-8.

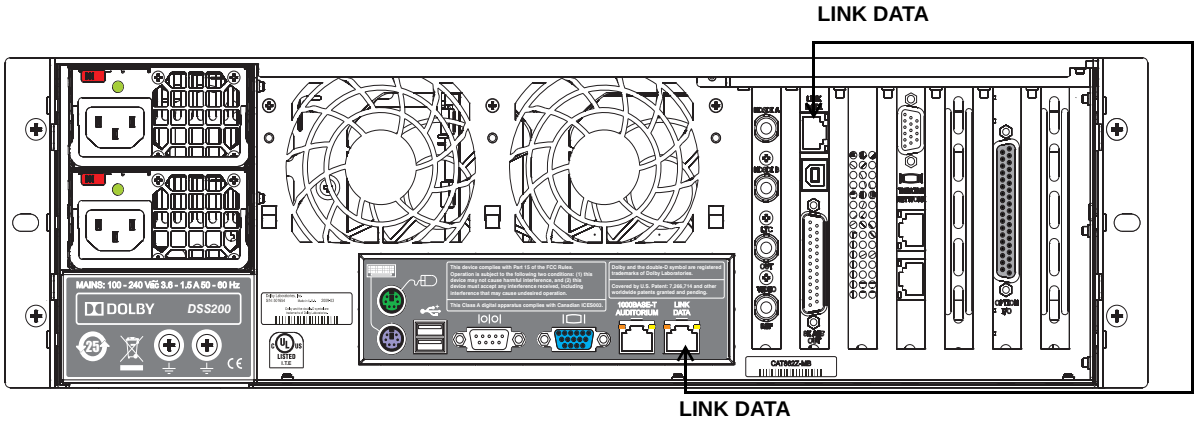

Figure 3-8 Interconnecting the DSS200 Link Data Ports

3.3.6 Connect DSS200 to Auditorium Network

To connect the DSS200 to the screen's auditorium network:

Connect one end of a CAT5e (or greater) Ethernet cable to the DSS200's **1000BASE-T AUDITORIUM** port, then connect the other end of the cable to the auditorium's 1000Base-T switch, as shown in Figure 3-9. The optional installation kits provide a cable that is color-coded blue and labeled for your convenience.

Note: Be sure the bend radius for each side of the CAT5e cable is not less than one inch (25 mm).

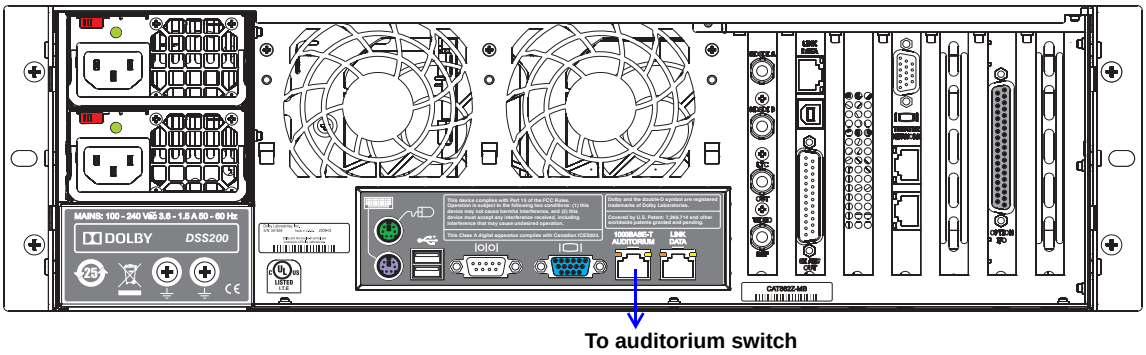

Figure 3-9 Connecting the DSS200 to the Auditorium Network

3.3.7 Connect Theatre Automation

You can use Dolby TMS software to control a theatre automation system using one of the following options:

- Connect a Dolby NA10 (if present) to the local auditorium switch and theatre automation system.
- Connect the Dolby DSS200 RS-232 serial port to a programmable logic controller (or other device) connected to the theatre automation system.
- Connect the DSS200 GPI/O port to a contact closure theatre automation system.

For information on using TMS, refer to the TMS online help system.

Connecting a Dolby NA10 to the Theatre Automation System

You can use a 50-foot CAT5e (or better) Ethernet cable to connect an NA10 to the screen's auditorium 1000Base-T switch. The optional installation kits provide a cable that is color coded blue and labeled for your convenience. For details, see the separate *Dolby NA10 Installation Manual*. The NA10 manual also explains how to interface the NA10 with the screen's existing automation system.

Note: Be sure the bend radius for each side of the CAT5e cable is not less than one inch (25 mm).

Connecting the DSS200 Serial Port to the Theatre Automation System

You can use the DSS200 serial port to connect to a theatre automation system that is capable of utilizing a serial connection (for serial pinouts, see the wiring diagram in Figure 3-19). For this type of configuration, an additional unit, such as a programmable logic controller (PLC) is required. You can turn on the Serial Automation function and enter the command strings within TMS (as described in that application's online Help system). To connect to a PLC or another device, use RS-232 serial protocol.

Additional Automation Capabilities

Digital Failsafe

If a problem occurs in the DSS200 that interrupts playback, the optional Digital Failsafe feature can detect the problem and communicate with the theatre automation system to perform the desired function (for example, turning the house lights on). Digital Failsafe utilizes three pins on the DSS200's **Option I/O** interface, as shown in Figure 3-19. For more information on implementing the Digital Failsafe function, contact your Dolby authorized technical service representative.

GPI/O

The DSS200's **Option I/O** port also provides an interface for connecting to a contact closure automation system that is capable of utilizing a GPI/O connection. This interface provides optically isolated inputs capable of standard 15 volt automation control or TTL level control.

The GPI/O interface supports the following input and output relays:

Input Relays

GPI1 (connector pin 20): Play

GPI2 (connector pin 21): Stop

GPI3 (connector pin 22): Pause

GPI4 (connector pin 23): Reselect
Use reselect when stopped to reset the transport to the ready state.

The inputs are edge triggered on the transition to the high state.

Output Relays

GPO1 (connector pin 17 normally closed, connector pin 36 normally open): Indicates whether the transport is in the running state. Common for the running state output relay is pin 16. In addition, there are nine configurable output relays.

To configure your output (GPO):

1. Create an offline XML configuration file for your GPO and save it on a USB stick.

   For information on the default configuration and the configuration schema, see Appendix F.

2. Run the Config script, as described on page 36, then import your configuration file, as described on page 39.

   Your configuration is displayed in TMS (Show Manager).

3. Use your GPO in a show. (See TMS online help for instructions on using cues in a show playlist.)

For a graphic depiction of the GPI/O pinouts, see the wiring diagram in Figure 3-19. For more information on setting up this type of configuration, contact your Dolby authorized technical representative.

3.3.8 Connect DMA8Plus, CP650, or CP750 to Auditorium Switch

To allow Dolby TMS to control a DMA8Plus, a similarly equipped CP650 , or a CP750 for the local screen, you must connect the respective unit to the auditorium's 1000Base-T switch:

Connect one end of a seven-foot CAT5e (or better) Ethernet cable to the respective unit's Ethernet port, then connect the other end of the cable to the auditorium's 1000Base-T switch. The optional Cat. No. 899-DMA8 (also for the CP750) and Cat. No. 899-DSS200/650 installation kits include a cable that is color coded blue and labeled for your convenience.

Note: Be sure the bend radius for each side of the CAT5e cable is not less than one inch (25 mm).

3.3.9 Connect DSS200 A/V Outputs

To connect the DSS200's audio and video outputs (see Figure 3-10):

1. Connect the provided red HD-SDI cable (SMPTE 292M 1.5 Gbps compliant) to the DSS200's **HDSDI A** output, then connect the other end of the cable to the digital cinema projector's **HDSDI A** input.

Caution: Encrypted content can be played only on a DCI-compliant digital cinema projector.

2. Connect the provided green HD-SDI cable from the DSS200's **HDSDI B** output to the digital cinema projector's **HDSDI B** input.

Note: Be sure the bend radius for each side of the HD-SDI cabling is not less than three inches (75 mm).

If your configuration uses a DMA8Plus:

- Connect the 25-pin D-connector cable (supplied with the optional Cat. No. 899-DMA8 Installation Kit) to the DSS200's **8 x AES OUT** connector, then connect the other end of the cable to the DMA8Plus **4 x AES IN** connector, as shown in Figure 3-10. The Dolby Part Number for this cable is 8305580.

  If you are not using a cable manufactured by Dolby, be sure to use a similar cable (RG59 or better) that meets the AES audio specification.

- Connect the DMA8Plus **AUDIO OUT TO CP** connector to the analog audio input on the auditorium's cinema sound processor.

If your configuration uses a CP650 with a Cat. No. 790 option card:

- Connect the DSS200's **8 x AES OUT** connector to the CP650 **OPTION CARD I/O** connector (with Cat. No. 790) using the special cable (supplied with the optional Cat. No. 899-DSS200/650 installation kit), as shown in Figure 3-11. The Dolby Part Number for this cable is 8309370.

If your configuration uses a CP750:

- Connect the DSS200's **8 x AES OUT** connector to the CP750 **4 x AES IN** connector using the special cable (supplied with the optional Cat. No. 899-DMA8 Installation Kit), as shown in Figure 3-12. The Dolby Part Number for this cable is 8305580.

Note: Be sure the bend radius for each side of the audio cabling is not less than two inches (50 mm).

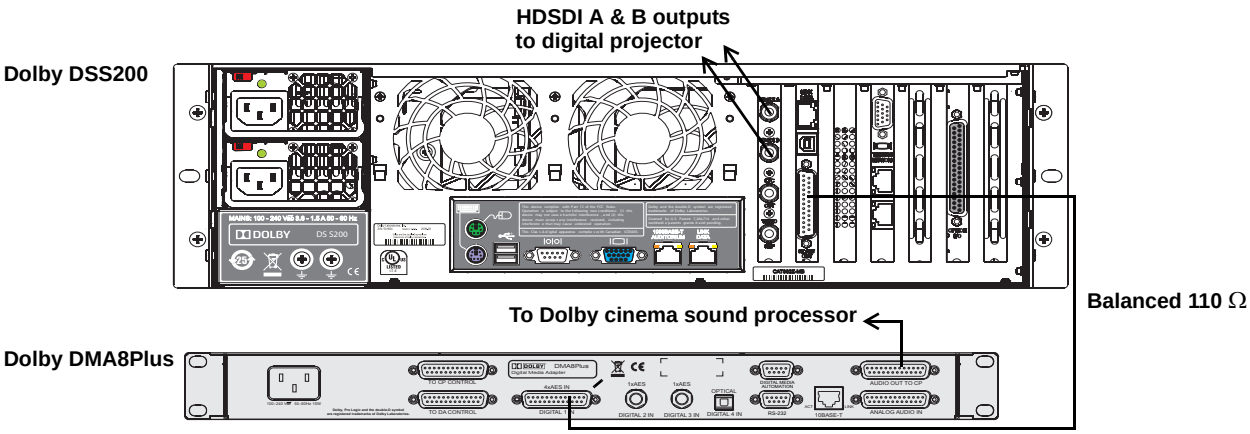

Figure 3-10 Connecting the DSS200 A/V Outputs (DMA8Plus Configuration)

Note: The DSS200 **8 x AES OUT** connector and the DMA8Plus **4 x AES IN** connector are balanced 110Ω. If you are not using a cable manufactured by Dolby, be sure to use a similar cable that meets the AES audio specification.

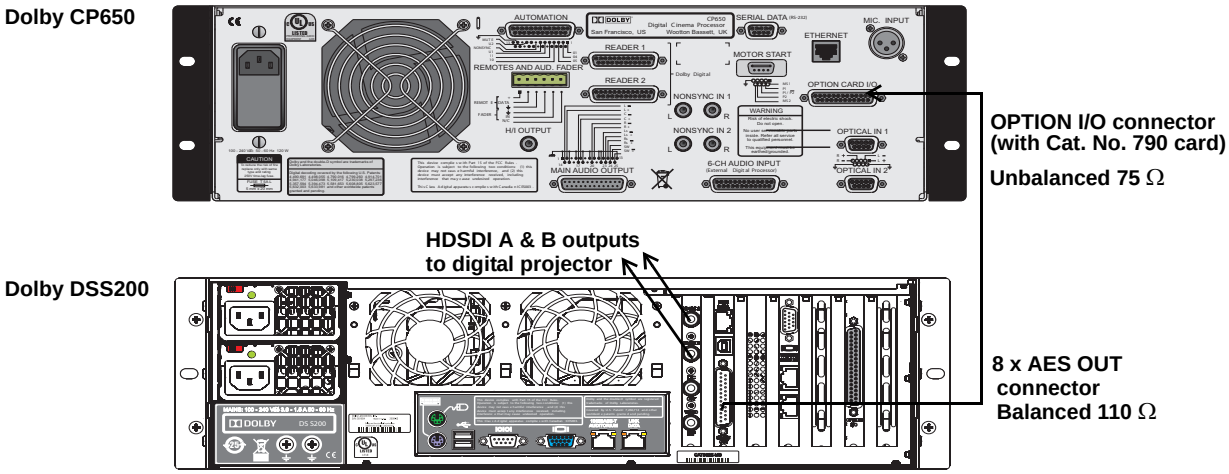

Figure 3-11 Connecting the DSS200 A/V Outputs (CP650 Configuration)

Note: The DSS200 **8 x AES OUT** connector is balanced 110Ω and the CP650 **OPTION CARD I/O** connector (with Cat. No. 790) is unbalanced 75Ω. If you are not using a cable manufactured by Dolby, be sure to use a similar cable that meets the AES audio specification.

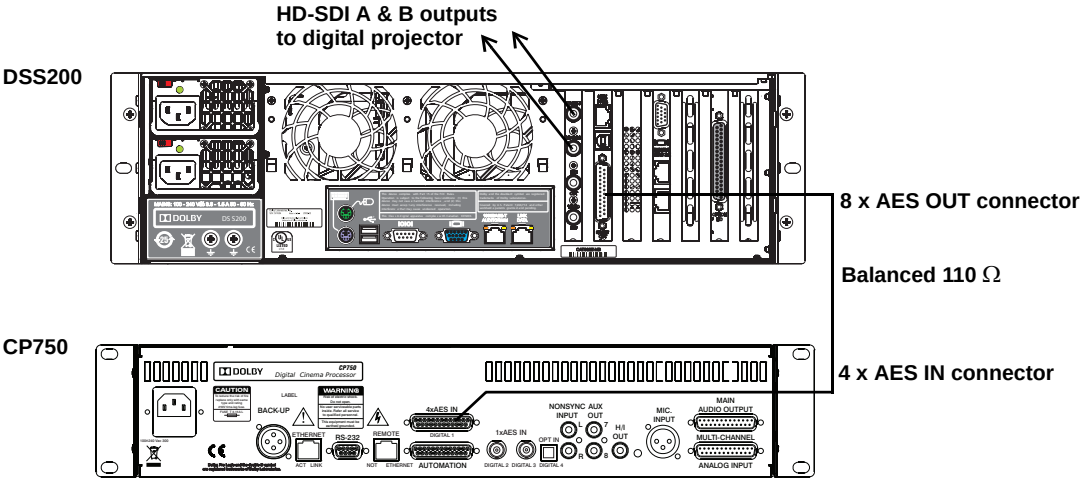

Figure 3-12 Connecting the DSS200 A/V Outputs (CP750 Configuration)

Note: The DSS200 **8 x AES OUT** connector and the CP750 **4 x AES IN** connector are balanced 110 Ω. If you are not using a Dolby manufactured cable, be sure to use a similar cable that meets the AES audio specification.

3.3.10 Connect Monitor, Keyboard, and Mouse to DSS200

The TMS software is installed on all DSS200s. To use TMS and operate the unit, you must connect a monitor, keyboard, and mouse as follows (for information on using Dolby TMS, refer to its online help system).

1. Use the provided special monitor cable to interconnect the two monitor ports on the DSS200 rear panel, connecting the male end of the cable to the lower port on the left and the female end of the cable to the upper port on the right, as shown in Figure 3-13.
2. Connect a USB or PS/2 keyboard and mouse to their respective ports on the DSS200 rear panel, or connect a USB keyboard and mouse to the USB ports on the front panel, as shown in Figure 3-13 and Figure 3-14.

Note: This connection allows you to connect a monitor directly to the monitor port on the DSS200 front panel, as shown in Figure 3-14. Alternatively, you can connect your monitor directly to the lower monitor port on the DSS200 rear panel (not using the special monitor cable or the front-panel monitor port).

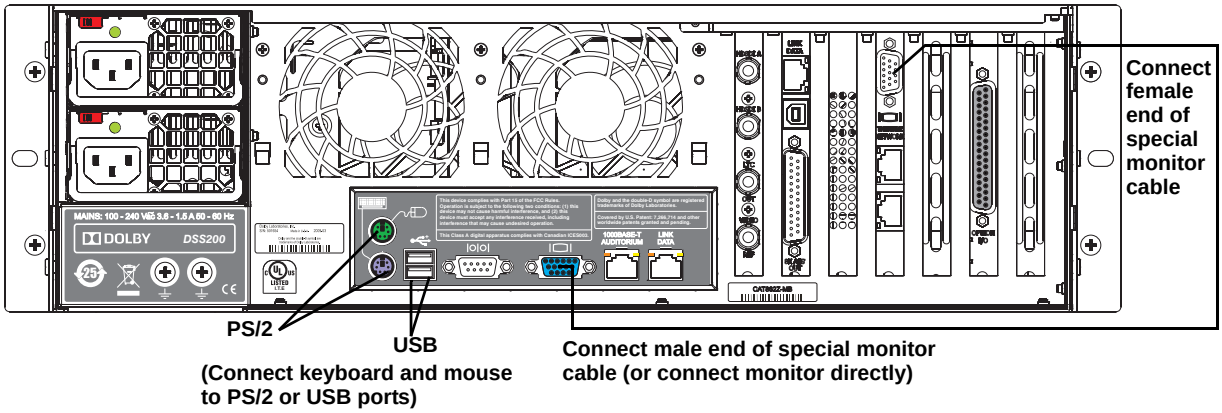

Figure 3-13 Connecting a Monitor, Keyboard, and Mouse to the DSS200

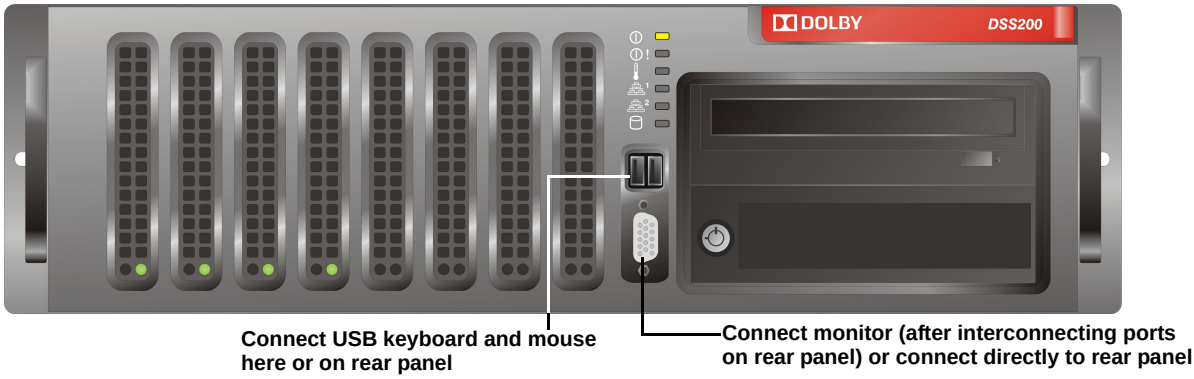

Figure 3-14 Connecting a Monitor, Keyboard, and Mouse to the Front Panel

3.4 Connecting Multiple Auditoriums to a Theatre Network

This section shows you how to connect multiple auditoriums to a Dolby Digital Cinema theatre network. After installing the hardware for each screen, continue the multiple-screen installation by connecting a DSL100 and the DSS200 in each auditorium to the theatre network, as described in the following sections.

Note: For multiple-screen configurations with three or less auditoriums, you can use one of the DSS200s as the TMS Server, instead of the DSL100.

3.4.1 Set Up Theatre Network

In a multiplex, you can install a Dolby Digital Cinema system in more than one auditorium, and set up a theatre network to manage each of these screens with Dolby TMS. You begin this type of installation by setting up a single-screen system in each auditorium following the instructions in the previous sections in this chapter. You can then continue with the installation by connecting the DSL100 and the DSS200 in each auditorium (along with any remote TMS Client PCs) to the theatre network switch (see Figure 3-15). The procedures that follow show you how to perform the installation.

Note: In a multiplex (see Figure 3-15), you connect a Dolby DSL100 to the theatre network for use as the Dolby TMS Server. In this type of configuration, the DSL100 is not directly connected to any specific auditorium network. It is connected only to the theatre network switch. For information on using Dolby TMS, refer to the TMS online help system.

Caution: To run your theatre network, the DSL100 and each DSS200 (or other Dolby servers) in the multiplex must have the same software version installed.

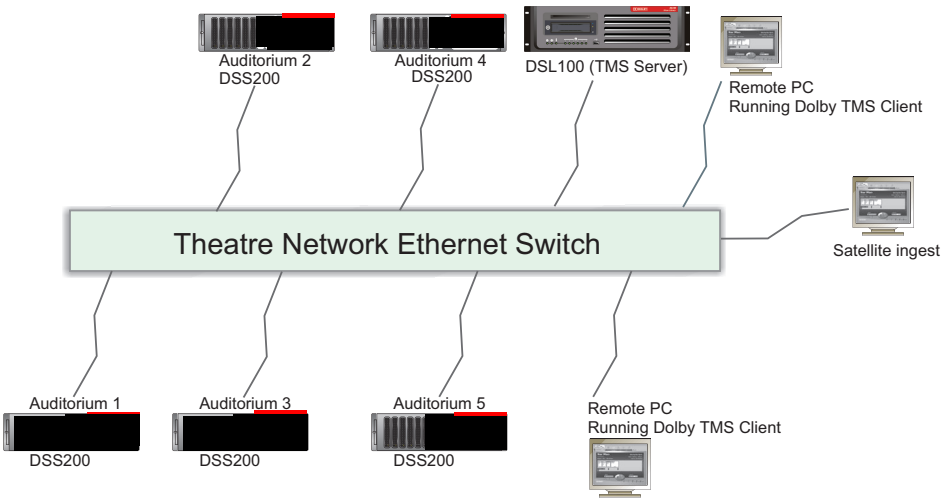

Figure 3-15 Typical Dolby Digital Cinema Theatre Network Top Level Diagram

3.4.2 Connect the DSL100 to the Theatre Network

If your Dolby Digital Cinema theatre network has four or more auditoriums, you need to use a DSL100 as the Dolby TMS Server. The TMS software is installed on the DSL100. To run TMS on a DSL100, you must connect a monitor and USB or PS/2 keyboard and mouse to the DSL100 rear panel. For information on using Dolby TMS, refer to the TMS online help system.

To connect the Show Library:

1. Connect a USB or PS/2 keyboard and mouse to the respective ports on the DSL100 rear panel, as shown in Figure 3-16.
2. Connect a computer monitor to the monitor port on the DSL100 rear panel.
3. Connect one end of the provided Ethernet cable to the DSL100 Ethernet port located next to the monitor port (or use the optional fiber connectors).
4. Connect the other end of the Ethernet cable (or optional fiber connectors) to the theatre network switch.
5. Power up the Show Library.

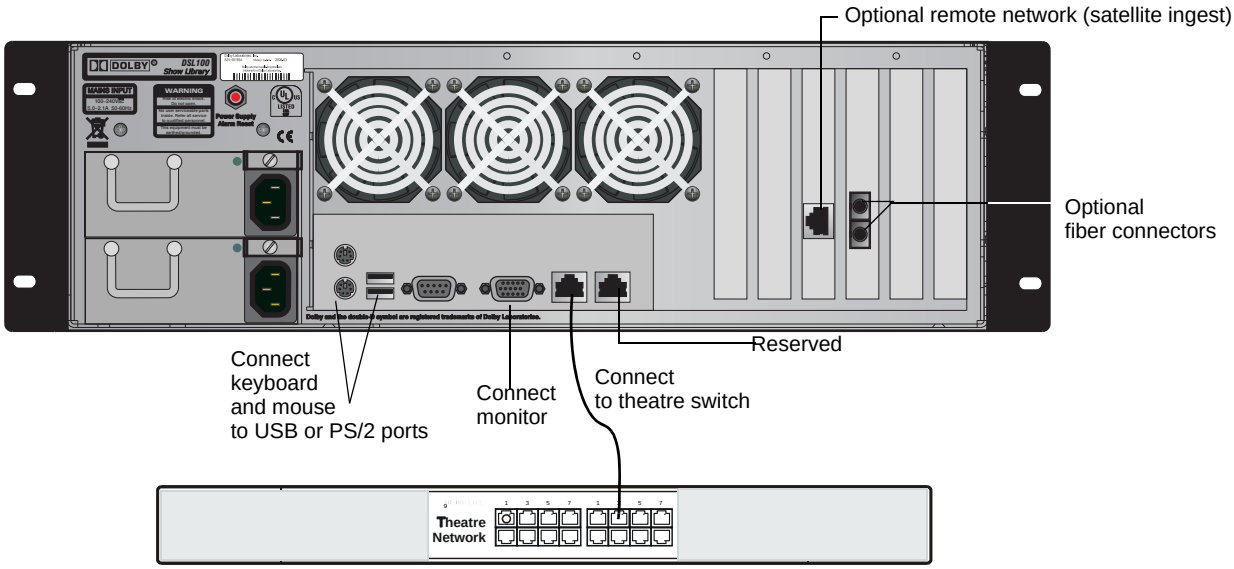

Figure 3-16 Connecting the DSL100 to the Theatre Network

3.4.3 Connect DSS200s to Theatre Network

To integrate each Dolby Digital Cinema auditorium network into an extended theatre network, you need to connect each DSS200 to the theatre network switch. The DSS200 provides a copper connection, which uses the rear-panel **THEATRE NETWORK** port. An optional fiber connection is also available. Copper is acceptable for cable runs of 100 meters or less. For cable runs of 100 meters or greater, fiber is required.

Caution: The theatre network must include only those devices dedicated to the Dolby Digital Cinema network.

To connect each of the DSS200s in a multiplex to a Dolby Digital Cinema theatre network (see Figure 3-17):

1. Connect one end of a CAT5e (or better) Ethernet cable to the appropriate DSS200 **THEATRE NETWORK** port. The optional installation kits provide a cable that is color-coded red and labeled for your convenience.

   After the installation is complete, always verify that you are transmitting and receiving data.

   Configure the DSS200 in each auditorium one at a time, as described on page 36, then connect the other end of the Ethernet cable to the theatre network's 1000Base-T switch (as required for your configuration).

Caution: To avoid possible server conflicts, before connecting each DSS200 to the theatre network switch, be sure to assign each DSS200 a unique auditorium number (see Configure Each Auditorium Network on page 36).

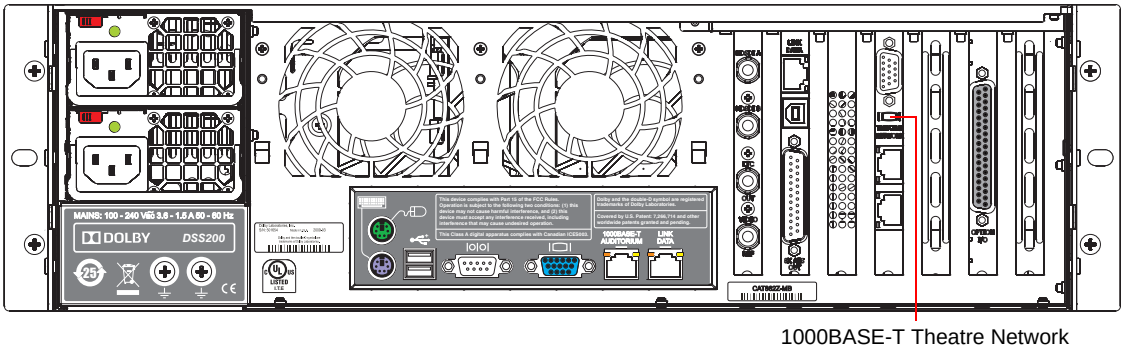

Figure 3-17 Connecting the DSS200 to the Theatre Network

Note: Be sure the bend radius for each side of the Ethernet cable is not less than one inch (25 mm).

3.4.4 Connect SAS External Storage to DSL100: Optional

A Dolby DSL100 can interface with qualified external storage via Serial Attached SCSI (SAS), providing additional storage capabilities. This external storage option requires a PCI/SAS card installed by Dolby, which provides a SAS connector on the DSL100 rear panel. For this configuration, you also need to obtain an external SAS system qualified by Dolby. Contact Dolby Laboratories to obtain a preconfigured DSL100 with the SAS option and a list of qualified external SAS systems.

To connect the DSL100 to the external SAS storage unit:

1. Contact Dolby Laboratories (or your distributor) for a list of supported SAS systems, and obtain the desired unit.
2. Connect one end of the provided SAS cable to the upper SAS port on the DSL100's rear panel, then connect the other end to the SAS unit's input port, as shown in Figure 3-18.

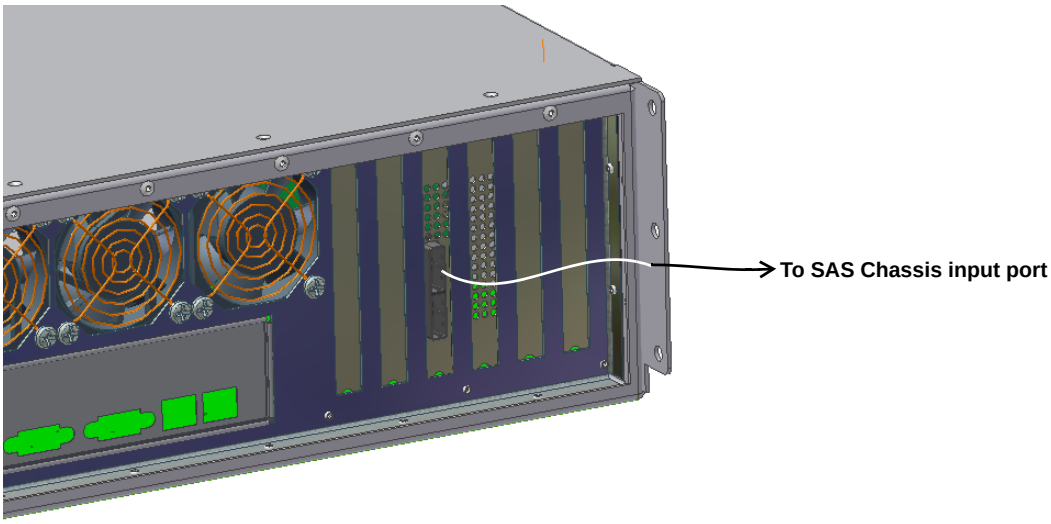

Figure 3-18 Connect DSL100 to SAS System

3. Connect the SAS unit to a power source using the provided cable, and turn on the power.
4. Reboot the DSL100.

   If you need to configure or reconfigure the SAS system, see the instructions on page 56. When the SAS system is configured, you can transfer content to and from the SAS drives following the instructions in the Dolby TMS online help.

3.5 DSS200 Wiring Diagram

Figure 3-19 provides a detailed DSS200 wiring diagram with related connections.

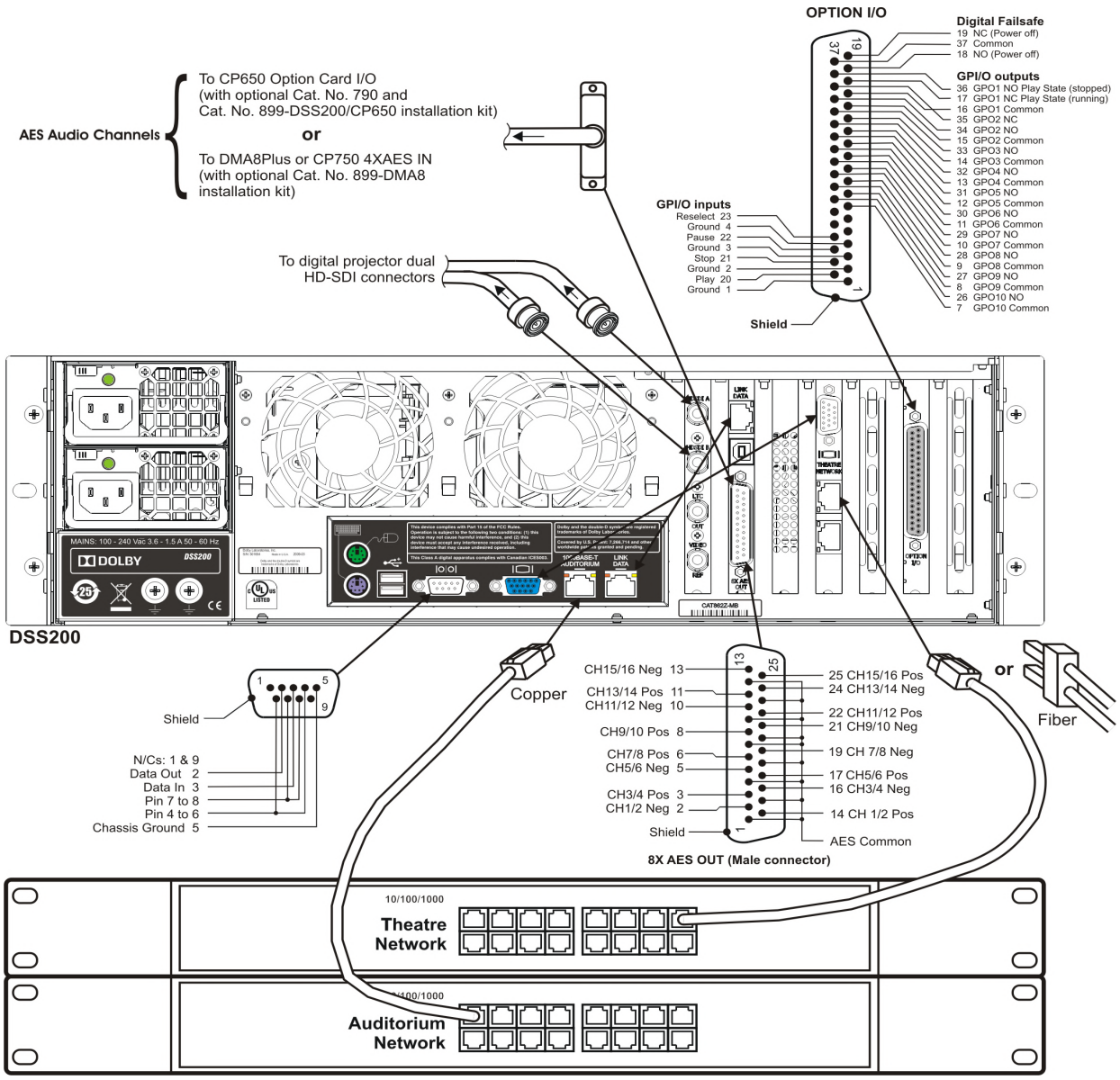

Figure 3-19 DSS200 Wiring Diagram

3.6 Configuring Single Auditoriums and Multiple Auditoriums

This section shows you how to configure and test a Dolby Digital Cinema system. Because single- and multiple-auditorium configurations are similar, this section covers both types of setups.

The Dolby Digital Cinema system provides configuration software (Config script) with semiautomatic default network settings for the DSS200, Show Library, CP650, CP750, DMA8Plus, NA10, and digital cinema projector, as described in Configure Each Auditorium Network on page 36. The Config script automatically applies these defaults to the DSS200 and DSL100 using the default screen number (1) for a single-auditorium installation and the specified screen number for each screen in a multiple-auditorium installation (for example, 1, 2, 3, 4, 5, 6, 7, and 8 for eight auditoriums). You must also set the defaults manually on the DMA8Plus, CP650, CP750, NA10, and digital cinema projector using the setup software included with each of these units. You can also use the Config script to override the default network settings and enter the desired settings.

3.6.1 Configure the NA10, DMA8Plus, CP650, CP750

Enter the following default IP addresses, or enter your own settings (x = auditorium number):

NA10	192.168.x.130
DMA8Plus	192.168.x.131
CP650	192.168.x.132
CP750	192.168.x.136

The default netmask for auditorium devices is 255.255.255.128.

Enter your settings using the setup software shipped with each of these units following the instructions in the respective documentation.

Note: Your entries must match the corresponding settings in the Config script. For more information, see Configure Each Auditorium Network on page 36.

3.6.2 Configure the Digital Cinema Projector

In a Dolby Digital Cinema auditorium network, the digital cinema projector connects to the auditorium switch, as shown in Figure 1-1. The Dolby Digital Cinema system supports Ethernet cues (lamp, douser, and macros) for the digital cinema projector.

TI DLP Projector Setup

To configure the projector's IP addresses, use the projector's setup software. The primary address for digital cinema is the TI™ DLP™ head address that is used for subtitle delivery and link encryption key exchange. However, Series 1 projectors also include a controller module with its own IP address. The system uses this OEM controller for automation cues, and its IP address must be set properly. The controller module IP address is not applicable for Series 2 projectors.

Enter the following default IP addresses or enter your own settings (x = auditorium number):

Projector TI DLP head (subtitles)	192.168.x.133 (Series 1 and Series 2 projectors)
Projector controller module	192.168.x.134 (Series 1 projectors only)

TI DLP Projector 2 Setup

For a two-projector 3D configuration, enter the following default IP addresses (or enter your own settings) for the second projector (x = auditorium number):

Projector 2 TI DLP head (subtitles)	192.168.x.137 (Series 1 and Series 2 projectors)
Projector 2 controller module	192.168.x.138 (Series 1 projectors only)

Enter your settings using the projector setup software following the instructions in the respective documentation.

Note: Your entries must match the corresponding settings in the Config script. For more information, see Configure Each Auditorium Network on page 36.

For detailed information on the projector settings, please contact the projector manufacturer.

3.6.3 Default IP Addresses in a Single-Auditorium Network

Figure 3-20 shows the default static IP addresses for all the units in a typical single-screen auditorium network. Also shown is an optional SMS Client (running on a remote PC). To run the Client in a remote location (for example, the manager's office), both the DSS200 and the PC must be connected to the optional theatre network switch. As a result, users can manage the system from the remote location using the SMS Client.

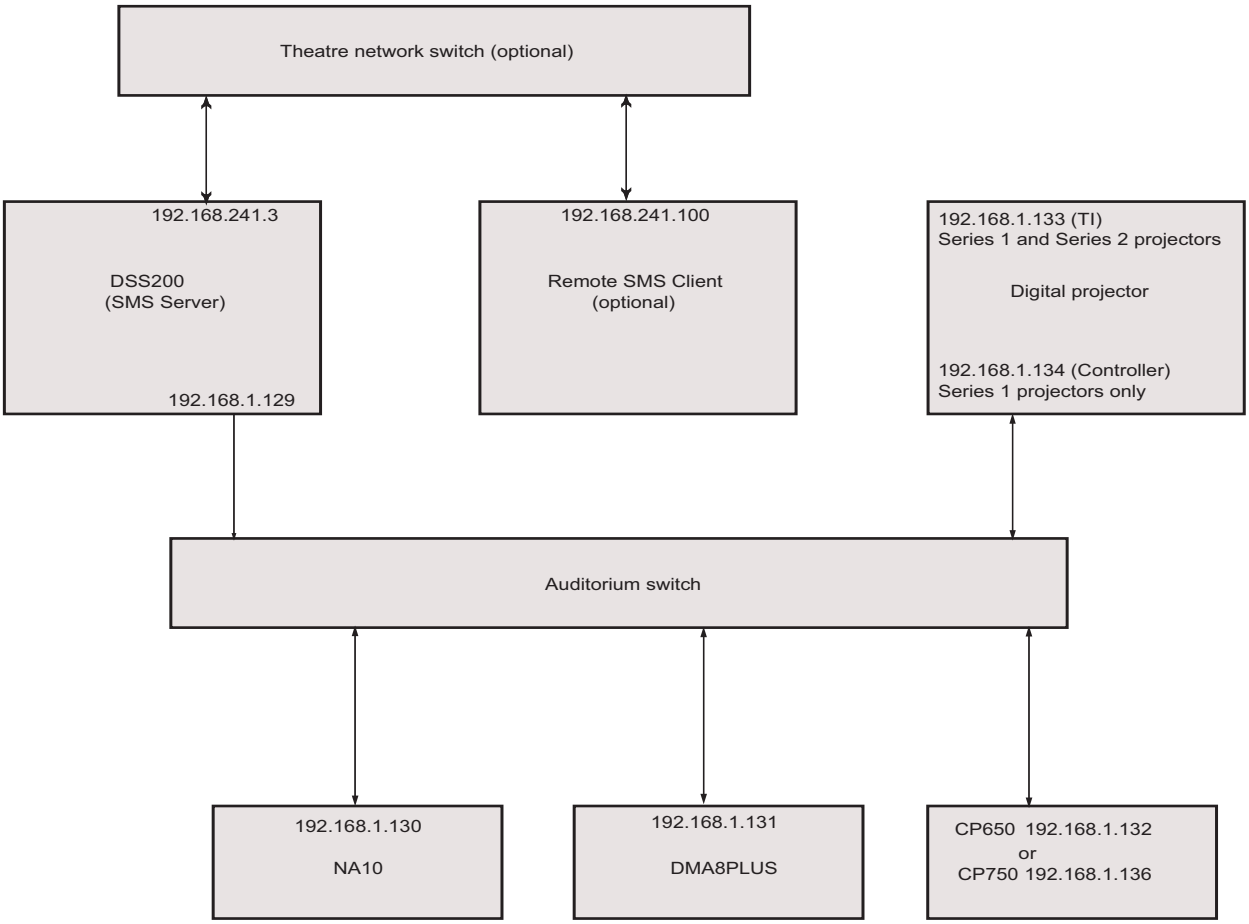

Figure 3-20 Default IP Addresses in a Single-Auditorium Network

3.6.4 Default IP Addresses in a Multiple-Auditorium Network

For multiple screens, each auditorium network uses the same default IP addresses shown above for a single auditorium, except for the third field, which represents the auditorium number. For example, a DSS200 in a single-auditorium network uses a default IP address of 192.168.1.129. In a multiple-auditorium network, the DSS200 in auditorium 1 also uses a default IP address of 192.168.1.129, but each of the DSS200s in the other auditoriums must use a unique screen number. For example, the DSS200 in auditorium 2 can use a default IP address of 192.168.2.129, the DSS200 in auditorium 3 can use 192.168.3.129, and so on. In a multiple-screen environment, a theatre network switch is required to interconnect all of the auditoriums by connecting to the DSS200 in each auditorium (in addition to any remote PCs) and a Show Library. In a multiplex, you set up the DSL100 as the TMS Server. As a result, users can manage any of the screens from a remote location using any TMS Client.

Network Settings Summary

The system uses the IP addresses in Table 3-1 (x=auditorium number)

Table 3-1 Network Settings

Component	IP Address	Net Mask	Default Gateway/Router
DSS200 auditorium network	192.168.x.129	255.255.255.128	N/A
NA10	192.168.x.130	255.255.255.128	192.168.x.129
DMA8Plus	192.168.x.131	255.255.255.128	192.168.x.129
CP650	192.168.x.132	255.255.255.128	192.168.x.129
CP750	192.168.x.136	255.255.255.128	192.168.x.129
TI DLP projector head (Series 1 and Series 2 projectors)	192.168.x.133	255.255.255.128	192.168.x.129
OEM projector controller (Series 1 projectors only)	192.168.x.134	255.255.255.128	192.168.x.129
DFC100 (if present in single-projector Dolby 3D setup)	192.168.x.135	255.255.255.128	192.168.x.129
TI DLP projector 2 head (dual-projector 3D setup for Series 1 and Series 2 projectors)	192.168.x.137	255.255.255.128	192.168.x.129
OEM projector 2 controller (dual-projector 3D setup for Series 1 projectors only)	192.168.x.138	255.255.255.128	192.168.x.129
DFC100 (for dual-projector 3D setup)	192.168.x.139	255.255.255.128	192.168.x.129
DSS200 theatre network	192.168.241.(x+2)	255.255.255.0	N/A
DSL100 Show Library on theatre network	192.168.241.2	255.255.255.0	N/A
TMS Client or utility PC on theatre network	192.168.241.y (where y is any unused number on the theatre network)	255.255.255.0	N/A

3.6.5 Configure Each Auditorium Network

The following procedure shows you how to configure each auditorium in a Dolby Digital Cinema multiscreen network or customize a single-screen configuration using the DSS200 Config script. For single-screen installations, if you are using all the semiautomatic default settings, you do not have to run the Config script and you can proceed to Section 3.6.6.

To configure a multiplex or customize your network settings (for single-screen or multiplex installations):

1. Boot up the DSS200 and be sure a monitor, keyboard, and mouse are connected to the unit.
2. Press <Ctrl> + <Alt> + <F1>.

Note: On some smaller keyboards you may need to press <F-Lock> to enable the dual-use key function.

The SMS/TMS console displays the default DSS200 auditorium number (1) and the login prompt.

3. Log in to the DSS200 using the special user ID*config*
4. Enter the configuration password *dolby*

   The **Configuration** screen appears, as shown in Figure 3-21. You can exit the script at any time by pressing <Esc> without changing any settings.

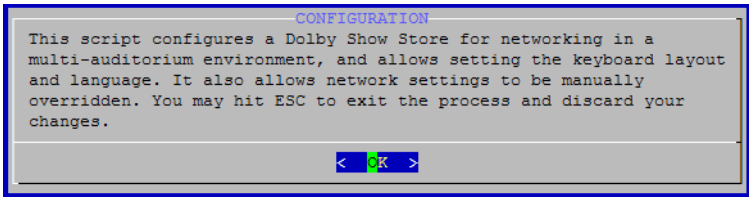

Figure 3-21 Config Script Welcome Screen

5. Press <Enter>.

   The **Auditorium Number** screen appears, as shown in Figure 3-22.

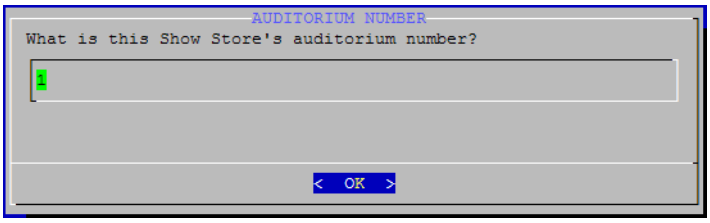

Figure 3-22 Auditorium Number Screen

6. Press <Enter> to select the default setting (1) for a single auditorium, or enter the desired auditorium number, and press <Enter>.

   The **Select Mode of Show Manager** (TMS) **Server** screen appears, which asks you to specify the Show Manager Server mode, as shown in Figure 3-23. The default is **SMS mode**.

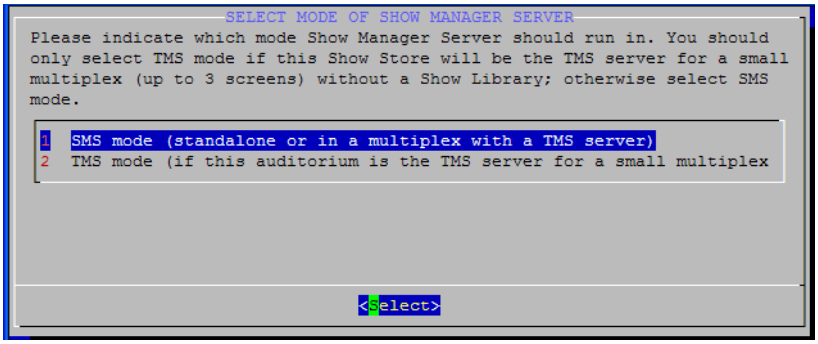

Figure 3-23 Select SMS or TMS Mode for this Unit

7. Select **TMS mode** only if there are three or fewer screens and this DSS200 is the TMS Server. Select **SMS mode** for all other configurations, for example:
   - There is only one screen.
   - There are three or fewer screens and this DSS200 is not the TMS Server.
   - A DSL100 is installed.
   - A third-party TMS is controlling this unit.

   If you press <Enter> to select **SMS mode** (default), the **Select Cinema Processor** screen appears, with three options: **No cinema processor** (for other cinema processors), **CP650,** and **CP750**, as shown in Figure 3-25. **No cinema processor** is applicable for any cinema processor that is not a CP650 or CP750. Proceed to step 8.

   If you select **TMS mode**, the **NTP warning** screen appears, as shown in Figure 3-24. If you see this message, you must proceed using one of the following options:

   - Manually set the NTP server address of each DSS200 (refer to Figure 3-34) using the IP address of an external NTP server (recommended for best accuracy).
   - Manually set the NTP server address of this DSS200 using the IP address of an external NTP server, and enter the theatre network address on this DSS200 (refer to Table 3-1) as the NTP server address on the other units (refer to Figure 3-34).
   - Manually set the NTP server address on the other DSS200s (refer to Figure 3-34) using the theatre network address on this DSS200 (refer to Table 3-1).

   When you select **OK** in the **NTP Warning** screen, the **Select Cinema Processor** screen appears, as described above. Proceed to step 8.

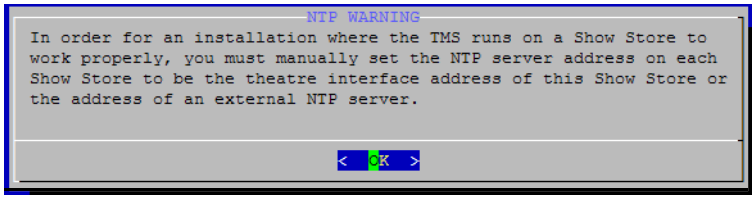

Figure 3-24 NTP Warning Screen

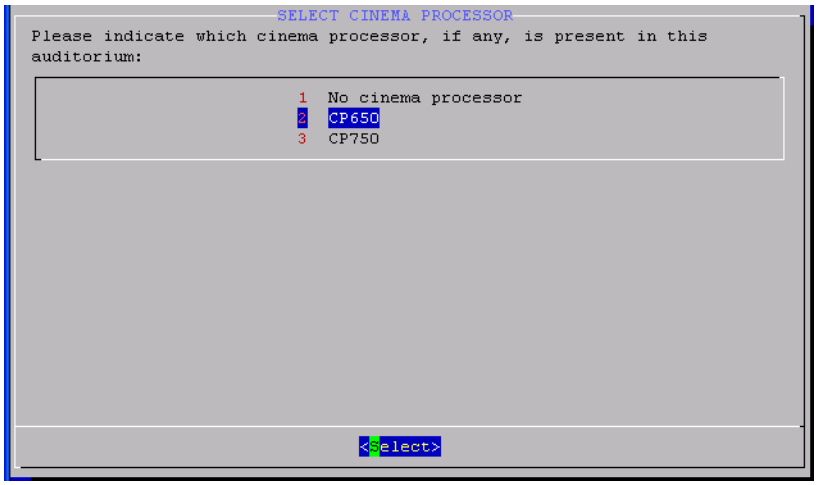

Figure 3-25 Select Cinema Processor Screen

8. Select the desired cinema processor option, then press <Enter>.
   The **NA10** screen appears, as shown in Figure 3-26.

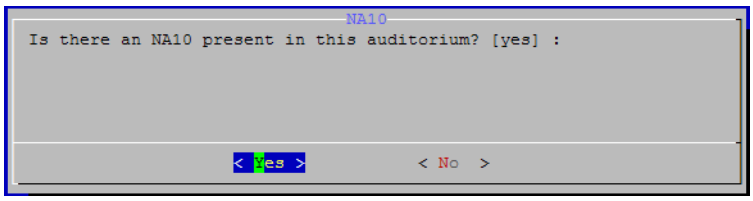

Figure 3-26 NA10 Screen

Press <Enter> to select **Yes** (default) if an NA10 is installed or press <Tab> to select **No** if it is not, and press <Enter>.

The DFC100 screen appears, as shown in Figure 3-27.

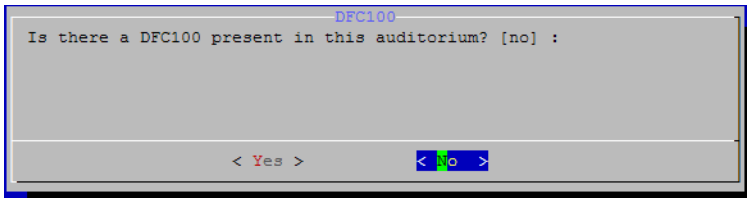

Figure 3-27 DFC100 Screen

9. Press <Enter> to select **No** (default) if a DFC100 is not installed or press <Tab> to select **Yes** if it is installed (for Dolby 3D), then press <Enter>.
   The **DMA8Plus** screen appears, as shown in Figure 3-28.

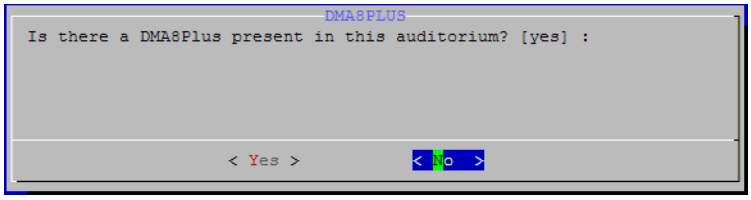

Figure 3-28 DMA8Plus Screen

10. Press <Enter> to select **No** (default) if a DMA8Plus is not installed or press <Tab> to select **Yes** if it is installed, and then press <Enter>.

    The Projector Series screen appears, as shown in Figure 3-29.

Figure 3-29 Projector Series Screen

11. Press <Enter> to select **Series 1** (default) or press <Tab> to select **Series 2**, and then press <Enter>.

    The **Select Projector Brand** screen appears, as shown in Figure 3-30.

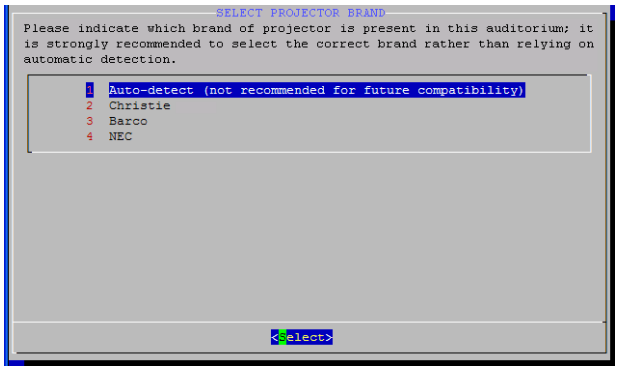

Figure 3-30 Select Projector Brand Screen

12. Select your projector, then press <Enter>.

    The **Import GPIO** screen appears, as shown in Figure 3-31.

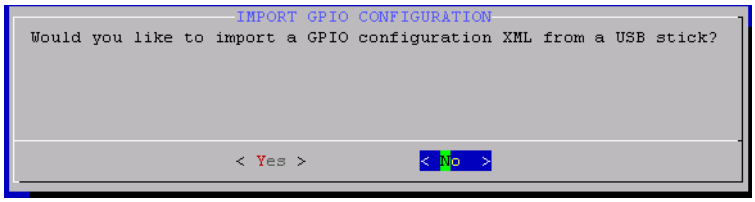

Figure 3-31 Import GPIO Configuration Screen

If you are using a GPI/O automation system, select **Yes** to import your GPI/O configuration from an XML file on an inserted USB device, then follow the onscreen instructions. If you are not using a GPI/O automation system, select **No**.

For information on the default GPI/O configuration and the configuration schema, see Appendix F.

The **Language Selection** screen appears, as shown in Figure 3-32.
The language setting specifies the type of keyboard that is connected to the system. For Italian, Chinese (Simplified), and Russian, this setting also specifies the respective Show Manager user interface (UI) translation. (All other language selections display an English UI.) Chinese and Russian selections support an English keyboard with a localized UI.

Figure 3-32 Language Selection Screen

13. Use the arrow keys to select your language, then press <Enter>. The default is **English**.

    The **Network Settings** screen appears, which asks if you want to override any network settings, as shown in Figure 3-33.

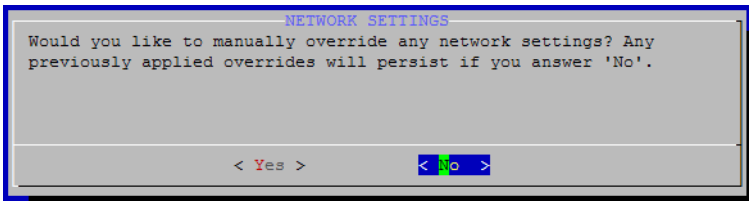

Figure 3-33 Network Settings Screen

- If you want to use the semiautomatic (auto) network settings, press <Enter> to select **No** and proceed to step 18. This configuration specifies the default network settings for a single auditorium, with no overrides.
- If you want to override the automatic settings, press <Tab> to select **Yes**, then press <Enter> to display the **Manual Configuration for Show Store** (DSS200) screen (as shown in Figure 3-34), and proceed to step 14. In this screen, you can select the network settings you want to override, and then enter the desired custom settings.
- For information on configuring two projectors, contact Dolby Laboratories.

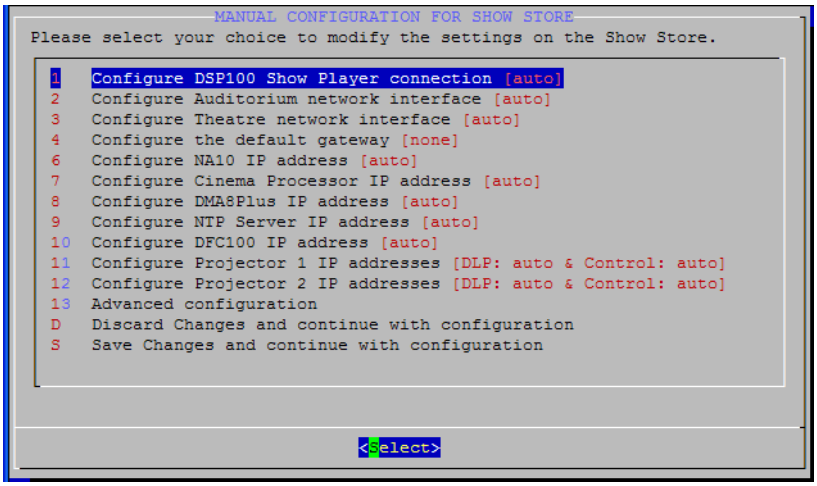

Figure 3-34 Manual Configuration for DSS200 Screen

14. Press the up/down arrow keys to select a network setting that you want to override, then press **Select**.
15. Enter the desired custom setting, then press <Tab> to select **OK** for that setting, and press <Enter>.

    Your custom setting replaces the word **auto** in the brackets next to that setting.
16. Repeat steps 14 and 15 for each setting you want to override.
17. If you want to allow the delivery of licenses (key delivery messages [KDMs]) using a modem, be sure to provide the modem's phone number to your distributor. The phone line must be equipped with a caller ID. To configure this option, select the **Advanced Configuration** option (option **15**), then select **Configure Modem Users for KDM Ingest** to display the **Modem Users Configuration for DSS200** screen and follow the bulleted steps below (if you do not want to perform this function, proceed to step 18).
    - Select **Add a new user** to display the **Enter New User Name** screen.
    - Enter the new user's login ID (one word with no blank spaces), then press <Enter> to display the **Enter New User Password** screen.
    - Enter the password (used to login) for the new user, then press <Enter> to display the **Enter New User Phone Number** screen. Users must login with the same user ID and password for both PPP and SFTP logins.
    - Enter the phone number that the user will be calling from (no dashes or spaces). You can also enter only the area code and prefix to allow anyone in this category to call in, or enter *any* to allow anyone to call in.
    - Press <Enter> to redisplay the **Modem Users Configuration for DSS200** screen with the new user's information.
    - Enter any other modem users you require following the preceding steps. You can also delete modem users on this screen.
    - Select **Done modifying modem users**, then connect one end of a Best Data 56 kbps USB modem to the phone line with a US caller ID, and the other end to one of the DSS200's USB ports.
    - Press <Esc> to redisplay the **Manual Configuration for Show Store** screen, and proceed to step 18.
18. Select **Save Changes and continue with configuration**, and press <Enter> to select **Yes** in the confirmation dialog box.

If you do not want to make any changes, select **Discard Changes and continue with configuration**, and press <Enter> to select **Yes** in the confirmation dialog box.

If you did not change the default network settings, a message informs you that the Config script will exit with no changes made. Press <Enter> to select **OK** to exit.

If you changed any of the default settings, the **Writing Settings** screen displays your revisions, as shown in the examples in Figure 3-35 for SMS mode and TMS mode.

```
WRITING SETTINGS
Your settings will now be saved. This is the last chance to hit ESC and discard any
changes. If you proceed past this point, you will need to reboot the Show Store.
The configuration choices that will be saved are:

Show Manager Server mode: SMS
Auditorium: 1

Cinema processor present: CP750
NA10 present:             yes
DFC100 present:           no
DMA8Plus present:         no
Projector brand present:  Christie
Projector series:         Series 1

Language: English

Automatic routing: yes
Management network: Theatre
```

SMS mode running on DSS200 (with Series 1 projector installed)

```
WRITING SETTINGS
Your settings will now be saved. This is the last chance to hit ESC and discard any
changes. If you proceed past this point, you will need to reboot the Show Store.
The configuration choices that will be saved are:

Show Manager Server mode: TMS
Auditorium: 1

Cinema processor present: CP750
NA10 present:             yes
DFC100 present:           no
DMA8Plus present:         no
Projector brand present:  NEC
Projector series:         Series 2

Language: English

Automatic routing: yes
Management network: Theatre
```

TMS mode running on DSS200 (with Series 2 projector installed)

Figure 3-35 Writing Settings Screens

If you want to save your settings, press <Enter>. If not, press <Esc>.

The system can take 30 seconds or more to save your settings.

If you don't save your settings, a message informs you that the Config script will exit with no changes made. Press <Enter> to select **OK** and exit. At this point, if you want to change your settings, you'll need to restart the Config script and start again.

After saving your settings, the **Device Addresses** screen displays the IP addresses that you may need to enter for the devices in the local auditorium, as shown in Figure 3-36. If you did not set up the applicable devices with these IP addresses (as explained earlier in this chapter), you'll need to do it now.

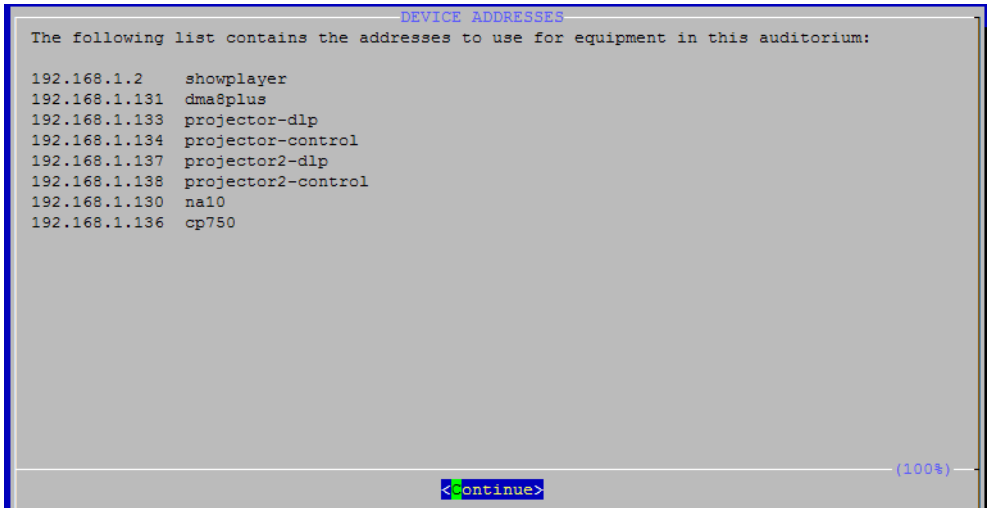

Figure 3-36 Device Addresses Screen

19. For a multiplex, connect the DSS200 to the theatre network switch, as described in Section 3.4.3 (then proceed to step 20). For a single auditorium, proceed directly to step 20.
20. Power up all the other units in the auditorium network, press <Enter> in the **Device Addresses** screen, then reboot the DSS200 at the prompt.

    When the unit completely reboots and TMS appears on the connected monitor, the configuration is completed.
21. For a multiplex, repeat this entire procedure one auditorium at a time for each Dolby Digital Cinema system in the theatre network.

Note: If you customized any network settings using the DSS200 Config script, you may need to update the other units in the Dolby Digital Cinema network manually, as they may no longer match the settings on the DSS200.

Using the Media Block USB Setup Application

The Media Block USB setup application allows you to configure the following parameters: **General Settings**, **Audio Controls**, **Delays**, **Network Settings**, and **3D Color** settings (for Dolby 3D).

To run the Media Block USB setup application:

1. Obtain the Media Block USB setup application from Dolby Laboratories and install it on your PC following the onscreen instructions.
2. Plug the flat side of a USB A/ B cable in one of your PC's USB-A ports (front or rear), then plug the square side of the cable in the setup/update port on the DSS200 rear panel.
3. Launch the Media Block USB setup application by selecting **Start**>**Programs**>**Dolby**>**Media Block Setup**.

   The **Media Block: USB** setup screen appears, as shown in Figure 3-37. In this screen, you can modify most of the displayed parameters..

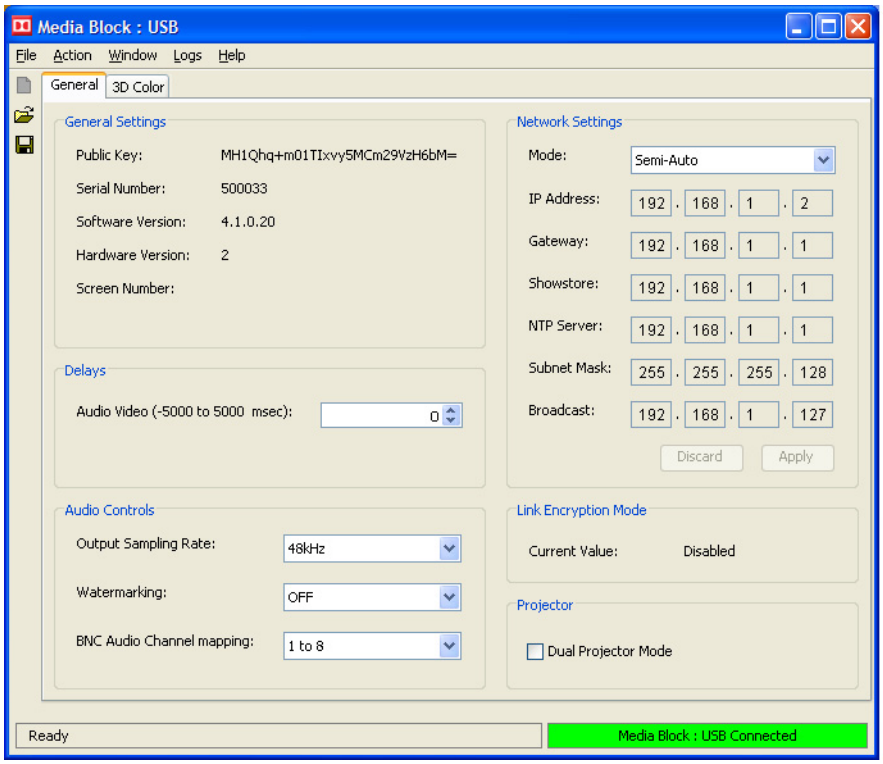

Figure 3-37 Media Block USB Setup Screen

Following is a description of the Media Block user parameters:

General

Clicking this tab displays these settings. Following is a description of the **General Settings**:

Public Key

The Media Block's unique key which allows the unit to play content using the associated license keys.

Serial Number

The CAT862's unique serial number.

Software Version

The currently installed version of the Media Block software.

Hardware Version

The currently installed version of the Media Block hardware.

Delays

Audio Video (-5000 to 5000 msec):

Synchronizes the audio with the video that is required for digital cinema projectors, which add a video processing delay. Click the up or down arrow to increase or decrease the displayed delay.

Network Settings

The Media Block's network settings.

Audio Controls

Following is a description of the **Audio Control Settings**:

Output Sampling Rate

Specifies either a 48 kHz or 96 kHz output sampling rate, as selected in the corresponding drop-down menu. The default is 48 kHz.

If your audio processor or adapter can accept or process 96 kHz audio, you can take advantage of the CAT862's ability to output 96 kHz. As a result, whenever the server content is recorded at 96 kHz, the system reproduces the audio accurately. When the server content is recorded at 48 kHz, the CAT862 upsamples to 96 kHz (if selected). If your audio processor or adapter cannot sample 96 kHz, be sure to set the CAT862 output to 48 kHz.

Watermarking

Specifies whether audio watermarking is on or off, as selected in the corresponding drop-down menu. The default is **OFF**.

Projector/Dual Projector Mode

Enables/Disables the use of two digital cinema projectors for specialized 3D presentations. For more information, contact your authorized Dolby technical representative.

3D Color (For Dolby 3D)

Clicking this tab displays the **3D Color Coefficients**, **Ghost Coefficients**, and the **Launch Color Correction Wizard** and **Advanced** buttons. For detailed instructions on setting the 3D color parameters, see the documentation shipped with the optional Dolby 3D Digital Cinema equipment.

3.6.6 Set the Time Zone

To set the time zone using the TMS Client interface:

1. Log in to TMS as `manager` or `installer` and go to **System** mode.
2. Ensure that the CAT862 is visible in the TMS Client **theatre devices** list.
3. Go to the **Theatre** properties tab.
4. Click the **Set Time Zone**... button.
5. Choose the closest city from the provided table.
6. Click **OK**.

3.6.7 Test the System

The installation test kit includes the *Dolby Digital Cinema Test Charts* DVDs. These DVDs include test files to help you set up and calibrate a Dolby Digital Cinema system. Following are some of the included test files. For complete details, see the insert included with the DVDs.

- Rotating Pink Noise
- Channel Identification
- Rotating Sweep Tones
- Aspect Ratio Test Signal
- Focus and Framing Check
- Dolby Trailers
- Masking Test Signals

3.7 Running the DSS200 Unconfig Script

The DSS200 Unconfig script provides options that allow you to remove all network settings and manual overrides, reset the DSS200 parameters to their factory defaults, and delete all content. To run the Unconfig script:

1. Boot up the DSS200 and be sure a monitor, keyboard, and mouse are connected to the unit.
2. Press <Ctrl> + <Alt> + <F1>.

Note: On some smaller keyboards, you may need to press <F-Lock> to enable the dual-use key function.

3. Log in to the DSS200 using the special user ID *unconfig*
4. Enter the configuration password *dolby*

   The **Unconfigure** screen appears, as shown in Figure 3-38. You can exit the script at any time by pressing <Esc> without changing any settings.

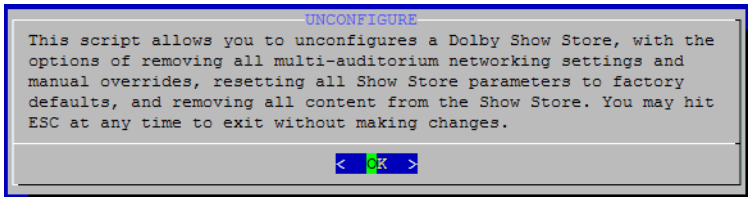

Figure 3-38 Unconfigure Screen

5. Press <Enter>

   The **Unconfigure Networking** screen appears, as shown in Figure 3-39.

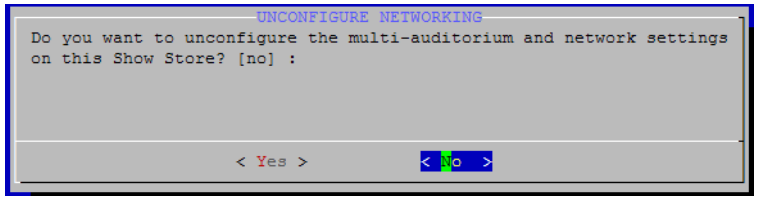

Figure 3-39 Unconfigure Networking Screen

6. Select **Yes** or **No**, and then press <Enter>.

   If you select **Yes**, the **Unconfigure Show Manager** (TMS) screen appears, as shown in Figure 3-40.

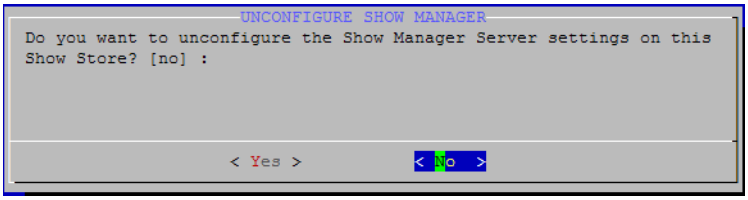

Figure 3-40 Unconfigure Show Manager Screen

7. Select **Yes** or **No**, and then press <Enter>.

   If you select **Yes**, the **Unconfigure Parameters** screen appears, as shown in Figure 3-41.

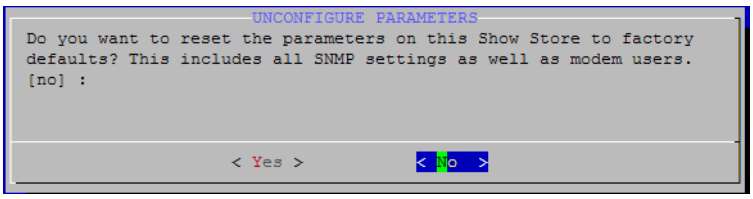

Figure 3-41 Unconfigure Parameters Screen

8. Select **Yes** or **No**, and then press <Enter>.

   The **Unconfigure Content** screen appears, as shown in Figure 3-42.

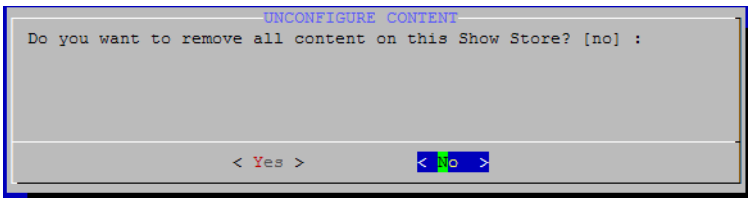

Figure 3-42 Unconfigure Content Screen

9. Select **Yes** or **No**, and then press <Enter>.

   If you select **Yes**, the **Unconfiguration Choices** screen appears, as shown in the example in Figure 3-43. This is your last chance to press <Esc> and exit without unconfiguring.

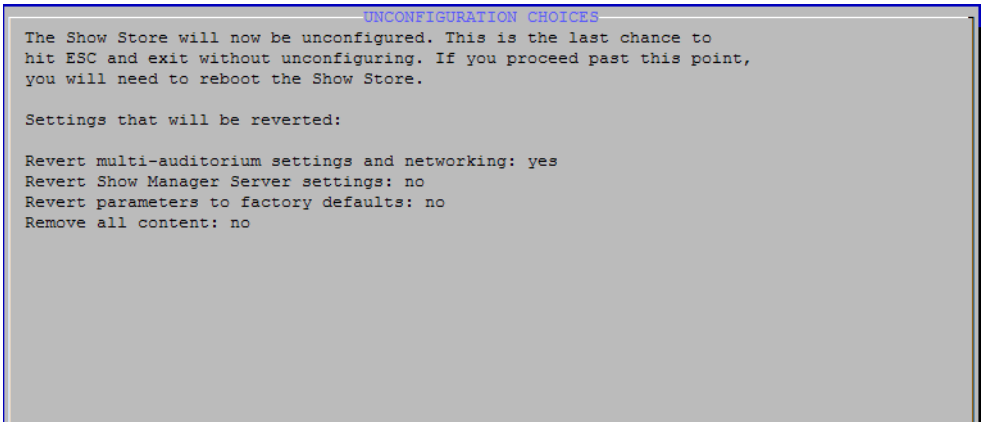

Figure 3-43 Unconfiguration Choices Screen

   If you want to save your settings, press <Enter>. If not, press <Esc>.

   The system can take 30 seconds or more to save your settings.

   If you don't save your settings, a message informs you that the Unconfig script will exit with no changes made. Press <Enter> to select **OK** and exit. At this point, if you want to change your settings, you'll need to restart the Unconfig script and start over.

10. Reboot the DSS200 by selecting <Ctrl> + <Alt> + <Delete>.

3.8 Importing and Exporting Serial Automation Cues

This utility enables you to export the serial automation configuration of one auditorium to a text file on a USB drive or import a previously exported configuration file. You must run this utility on the system where the TMS Server is running. In a DSL100 network, this must be the Show Library. This utility also allows you to export the serial automation configuration from one stand-alone system and import it to another stand-alone system.

3.8.1 Exporting Serial Automation Cues

To run the export script:

1. Boot up the DSS200 and be sure a monitor, keyboard, and mouse are connected to the unit.
2. Press <Ctrl> + <Alt> + <F1>.

Note: On some smaller keyboards, you may need to press <F-Lock> to enable the dual-use key function.

3. Log in to the DSS200 using the special username *serial*
4. Enter the configuration password: *dolby*

The **Serial Automation Cues** screen appears, as shown in Figure 3-44. You can exit the script at any time by pressing <Esc> without changing any settings.

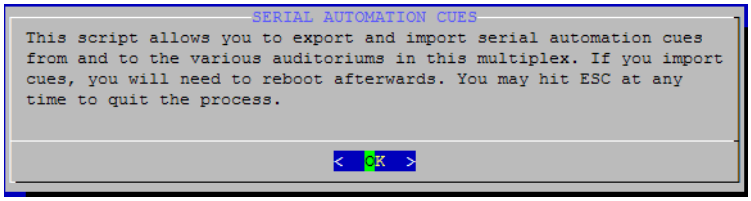

Figure 3-44 Serial Automation Cues Screen

5. Press <Enter>.
   The **Export or Import** screen appears, as shown in Figure 3-45.

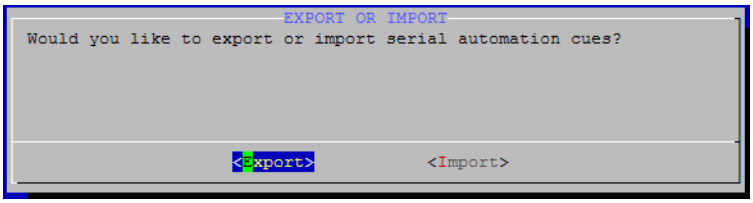

Figure 3-45 Export or Import Screen

6. Select **Export**, and then press <Enter>.
   The **USB Drive Needed** screen appears, as shown in Figure 3-46.

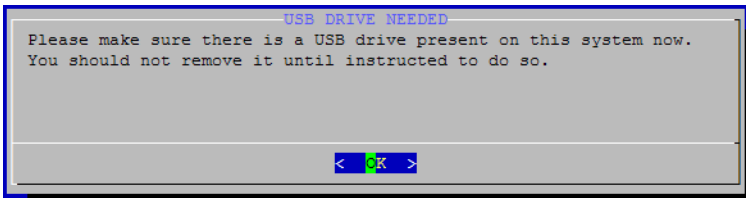

Figure 3-46 USB Drive Needed Screen

7. Insert a USB drive in the DSS200, and then press <Enter>.
   The **Auditorium Number** screen appears, as shown in Figure 3-47.

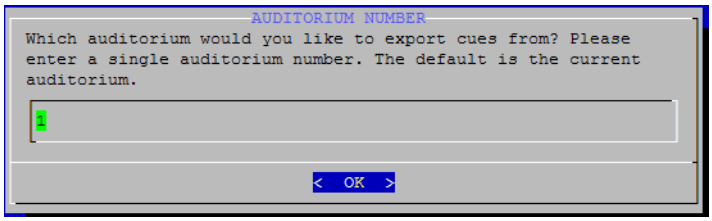

Figure 3-47 Auditorium Number Screen

8. Type the auditorium number where you want to export cues from, then press <Enter>.
   The **Exporting** screen appears, as shown in Figure 3-48. When the system completes the export process, the **Complete** screen appears, as shown in Figure 3-49.

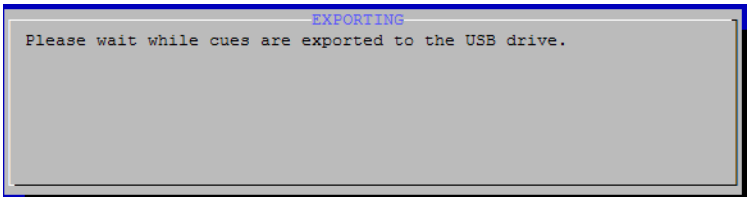

Figure 3-48 Exporting Screen

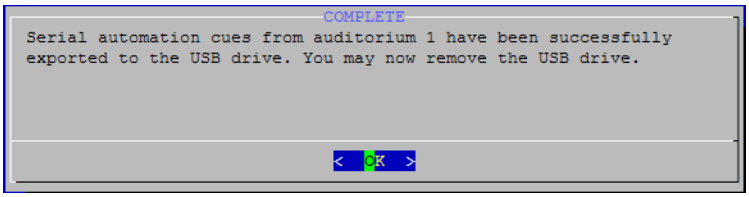

Figure 3-49 Complete Screen

3.8.2 Importing Serial Automation Cues

To run the Import script, follow the preceding instructions for exporting serial automation cues, but select **Import** instead of **Export** in the **Export or Import** screen.

3.9 Configuring the Show Library

To use the Show Library as the central server in a Dolby Digital Cinema multiplex (more than three auditoriums), you do not have run its Config script unless you need to override its default settings. To override the Show Library default settings:

1. Be sure the Show Library is powered up and a monitor, keyboard, and mouse are connected to the unit.
2. Press <Ctrl> + <Alt> + <F1>.

Note: On some smaller keyboards, you may need to press <F-Lock> to enable the dual-use key function.

The Show Library console displays the log-in prompt.

3. Log in to the Show Library using the special user ID *config*
4. Enter the configuration password *dolby*

   The **Configuration** screen appears, as shown in Figure 3-50. You can exit the script at any time by pressing <Esc> without changing any settings.

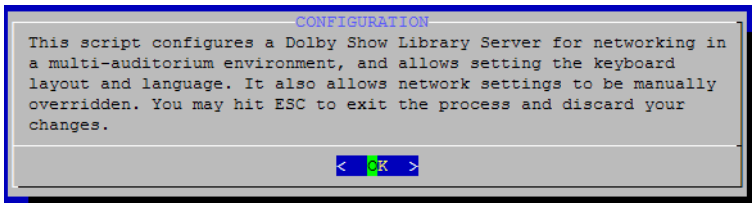

Figure 3-50 Configuration Welcome Screen

5. Press <Enter>.

   The **Database Maintenance** screen asks if you'd like to perform database management (that is, restoring from a backup, offloading to USB, and so on), as shown in Figure 3-51.

   If you don't want to perform these tasks, proceed directly to step 6. If you want to perform these tasks, press <Tab> to select **Yes** to display the **Database Maintenance For Show Library** screen, as shown in Figure 3-52.

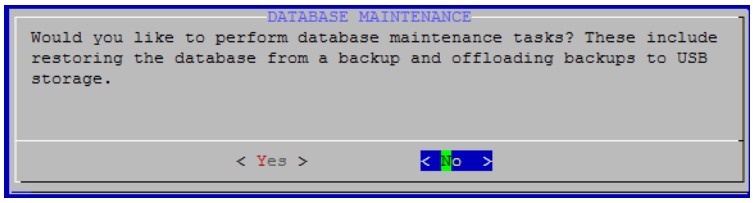

Figure 3-51 Database Maintenance Screen

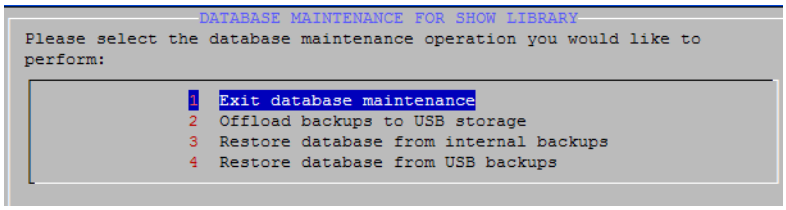

Figure 3-52 Database Maintenance for Show Library Screen

- To offload a backup, insert a USB device in one of the Show Library's USB ports, and then select option **2** (**Offload backups to USB storage**). A confirmation message tells you when you can remove the USB device.
- To restore the database using either option **3** (**Restore database from internal backups**) or option **4** (**Restore database from USB backups**), select the respective option, then select the date and time for the database you want to restore from the displayed list. A confirmation tells you when the restoration is completed, and prompts you to reboot. After you reboot, if you want to reconfigure any of the other Show Library settings, begin again with step 1.

6. Press <Enter>.
7. If your system has a SAS external storage device connected, the **SAS RAID Configuration for Show Library** screen appears, as shown in Figure 3-57. Proceed directly to step 18.
8. If your system does not have a SAS connected, the **Network Settings** screen appears, which asks if you want to override any network settings, as shown in Figure 3-53. Proceed to step 9.

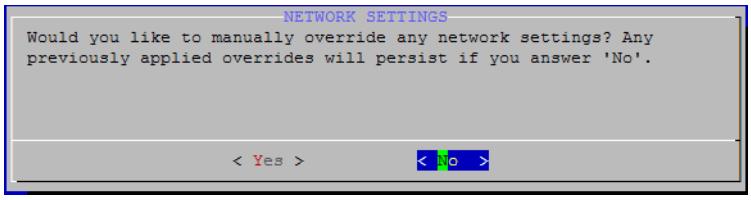

Figure 3-53 Network Settings Screen

9. If you want to use the semiautomatic (auto) network settings, press <Enter> to select **No** and display the **Language Selection** screen (as shown in Figure 3-55), and proceed to step 15.

   This configuration specifies the default network settings with no overrides.

   If you want to override the semi-automatic settings, press <Tab> to select **Yes**, then press <Enter> to display the **Manual Configuration for Show Library** screen, as shown in Figure 3-54, and proceed to step 10.

   In this screen, you can select the network settings you want to override, and then enter the desired custom settings.

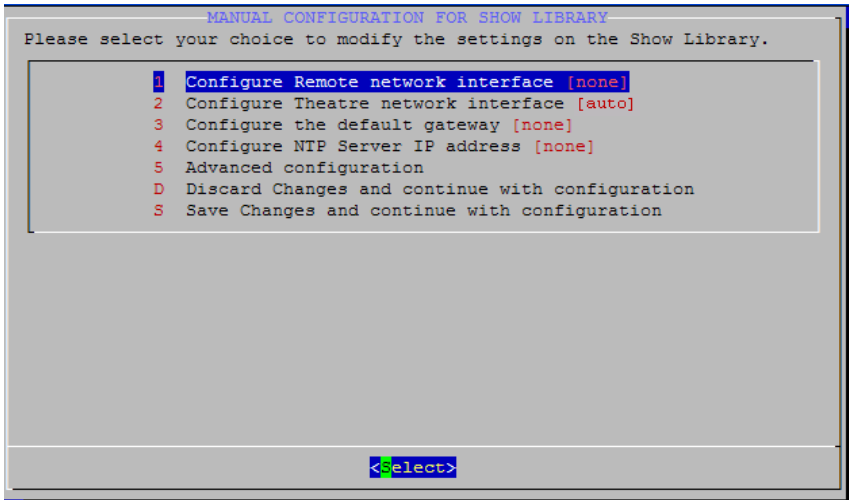

Figure 3-54 Manual Configuration for Show Library Screen

10. Press the up/down arrow keys to select a network setting that you want to override, then press **Select**.
11. Enter the desired custom setting, then press <Tab> to select **OK** for that setting.

    Your custom setting replaces the word **auto** in the brackets next to that setting.
12. Repeat steps 10 and 11 for each setting you want to override, then use the up/down arrow keys to select **Save Changes and continue with configuration**, and select **OK** in the confirmation dialog box.

    If you do not want to make any changes, select **Discard Changes and continue with configuration,** and select **OK** in the confirmation dialog box.
13. If you want to allow the delivery of license KDMs using a modem, be sure to provide the modem's phone number to your distributor. The phone line must be equipped with a caller ID. To configure this option, select the **Advanced Configuration** option (option **5**), then select **Configure Modem Users for KDM Ingest**, to display the **Modem Users Configuration for Show Library** screen and perform the following bulleted steps (if you do not want to perform this function, proceed to step 14).
    - Select **Add a new user** to display the **Enter New User Name** screen.
    - Enter the new user's login ID (one word with no blank spaces), then press <Enter> to display the **Enter New User Password** screen.
    - Enter the password (used to login) for the new user, then press <Enter> to display the **Enter New User Phone Number** screen. Users must login with the same user ID and password for both PPP and SFTP logins.
    - Enter the phone number that the user will be calling from (no dashes or spaces). You can also enter only the area code and prefix to allow anyone in this category to call in, or enter *any* to allow anyone to call in.
    - Press <Enter> to redisplay the **Modem Users Configuration for Show Library** screen with the new user's information.
    - Enter any other modem users you require, repeating the preceding steps. You can also delete modem users on this screen.
    - Select **Done modifying modem users**, then connect one end of a Best Data 56 kbps USB modem to the phone line with a US caller ID, and the other end to one of the DSS200's USB ports.
    - Press <Esc> to redisplay the **Manual Configuration for Show Library** screen, and proceed to step 14.

14. Select **Save Changes and continue with configuration**, and press <Enter> to select **Yes** in the confirmation dialog box.

    If you do not want to make any changes, select **Discard Changes and continue with configuration**, and press <Enter> to select **Yes** in the confirmation dialog box.

    The **Language Selection** screen appears, as shown in Figure 3-55. For Italian, Chinese (Simplified), and Russian, this setting also specifies the respective Show Manager UI translation. (All other language selections display an English UI.) Chinese and Russian selections support an English keyboard with a localized UI.

Figure 3-55 Language Selection Screen

15. Use the arrow keys to select your language, then press <Enter>. The default is **English**.

    The **Writing Settings** screen displays your settings, as shown in the example in Figure 3-56.

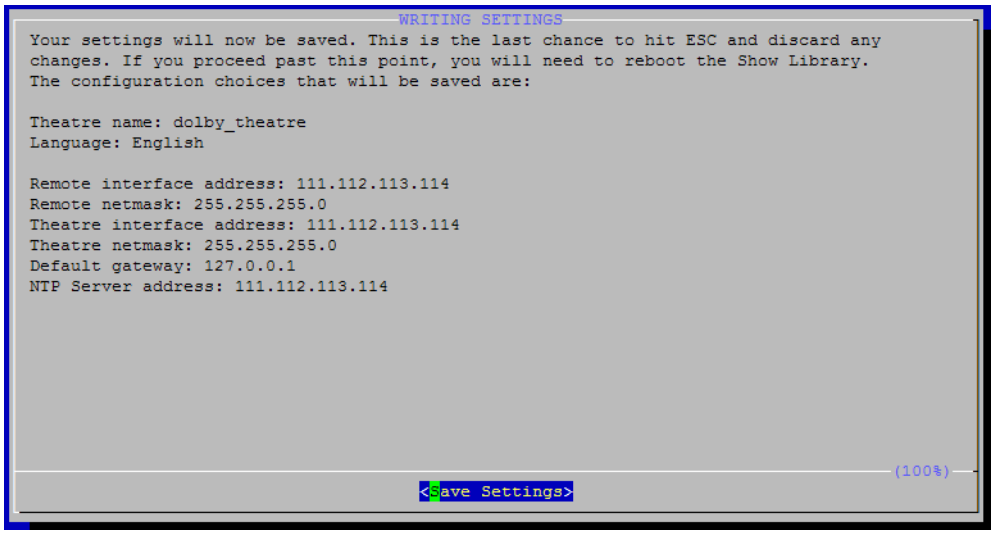

Figure 3-56 Writing Settings Screen

16. If you want to save your settings, press <Enter>. If not, press <Esc>.

    The system can take 30 seconds or more to save your settings.

If you don't save your settings, a message informs you that the Config script will exit with no changes made. Press **OK** to exit. At this point, if you want to change your settings, you'll need to restart the Config script and repeat the previous steps.

17. Reboot the system by selecting <Ctrl>+<Alt>+<Delete>.

    When the unit completely reboots and TMS appears on the connected monitor, the configuration is completed.

    Steps 18 and 19 are applicable only for units connected to a SAS external storage device.

    If your system has a SAS external storage device connected, the **SAS RAID Configuration for Show Library** screen appears (after the Database Maintenance screen, shown earlier in this procedure in Figure 3-52). Proceed directly to step 18.

18. Select **Configure SAS enclosure** if you want to configure the SAS device. If you do not want to configure the SAS, select **Continue,** refer to Figure 3-53, and then proceed directly to step 9.

    If your system has a SAS but is not configured, the system displays the **SAS RAID Configuration for Show Library (Advanced)** screen shown in Figure 3-57

    If your system was installed and configured with a SAS external storage device, the **SAS RAID Configuration for Show Library (Advanced)** screen in Figure 3-58 appears. In this screen, you can either reinitialize the SAS and delete all your data, use the existing partition and return to the main menu, or disable SAS support. If you select the reinitialize option, the system displays the **SAS RAID Configuration for Show Library (Advanced)** screen in Figure 3-59.

19. Either do or do not allocate a hot spare drive by selecting the desired option in the **SAS RAID Configuration for Show Library (Advanced)** screen in Figure 3-59, then press <Enter>.

    A hot spare is an extra installed drive that is not included in the RAID array unless a drive in the array fails. In such a case, the system automatically rebuilds the array to include the hot spare. The failed drive's LED remains red, while the hot spare's LED illuminates in green.

    The system begins the configuration/initialization process, which takes approximately 24 hours. A black text screen appears, and after a few minutes, the **Network Settings** screen reappears, as shown in Figure 3-53, and you can continue with the configuration.

    When the process is completed, the SAS LEDs stop blinking and you need to reboot the system. After you reboot, if you want to reconfigure any of the other Show Library settings, begin again with step 1. You can transfer content to and from the SAS drives following the instructions in the TMS online help.

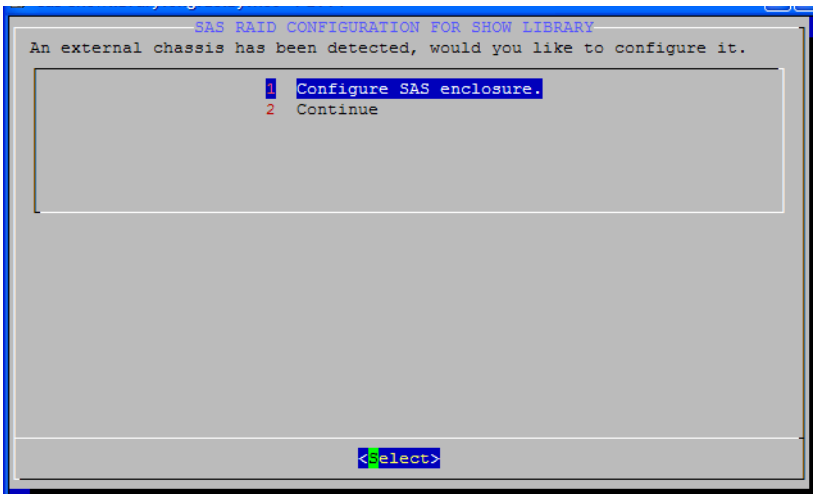

Figure 3-57 SAS RAID Configuration for Show Library Screen

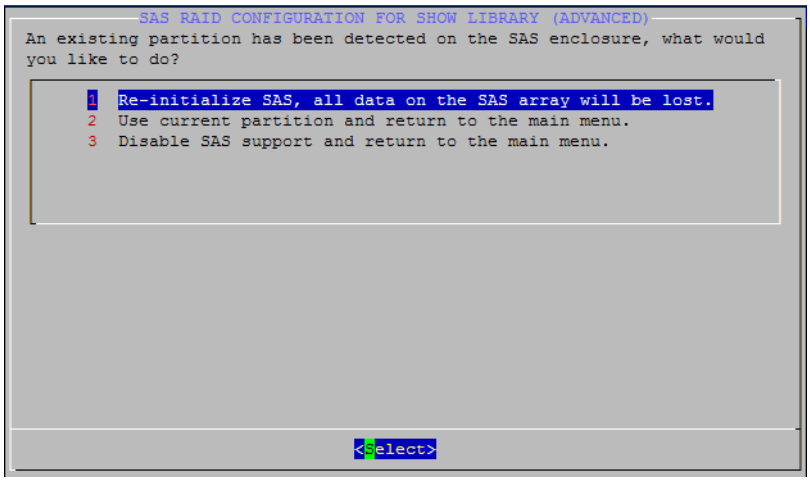

Figure 3-58 SAS RAID Configuration for Show Library (Advanced) Screen: Already Configured

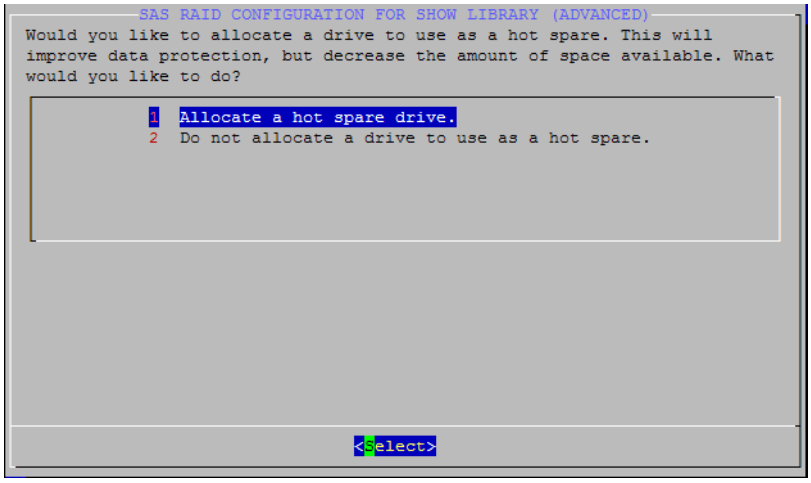

Figure 3-59 SAS RAID Configuration for Show Library (Advanced) Screen

3.10 Running the Show Library Unconfig Script

The Show Library Unconfig script provides options that allow you to remove all network settings, manual overrides, and content, and reset the Show Library parameters to their factory defaults. To run the Unconfig script:

1. Boot up the Show Library, and be sure a monitor, keyboard, and mouse are connected to the unit.
2. Press <Ctrl> + <Alt> + <F1>.

Note: On some smaller keyboards, you may need to press <F-Lock> to enable the dual-use key function.

3. Log in to the Show Library using the special user ID *unconfig*
4. Enter the configuration password *dolby*

   The **Unconfigure** screen appears, as shown in Figure 3-60. You can exit the script at any time by pressing <Esc> without changing any settings.

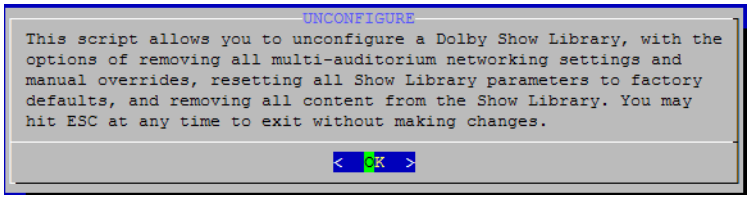

Figure 3-60 Unconfigure Screen

5. Press <Enter>.

   The **Unconfigure Networking** confirm screen appears, as shown in Figure 3-61.

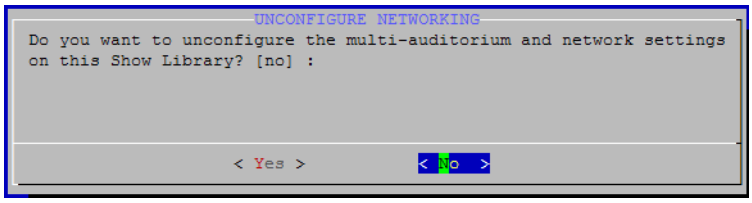

Figure 3-61 Unconfigure Networking Confirm Screen

6. Select **Yes** or **No**, and then press <Enter>.

   If you select **Yes**, the **Unconfigure Show Manager** screen appears, which asks if you want to unconfigure the Show Manager (TMS) Server settings, as shown in Figure 3-62.

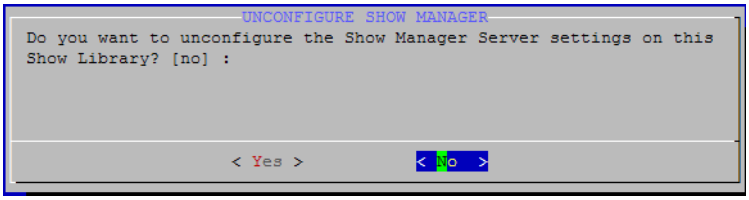

Figure 3-62 Unconfiguration Complete Screen

7. Select **Yes** or **No**, and then press <Enter>.

   The **Unconfigure Parameters** screen appears, as shown in Figure 3-63. In this screen, you can reset all parameters to the factory defaults.

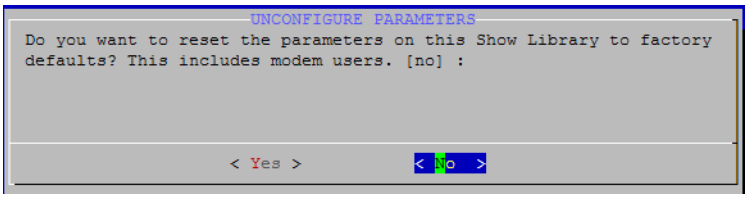

Figure 3-63 Unconfigure Parameters Screen

8. Select **Yes** or **No**, and then press <Enter>.

   The Unconfigure Content screen a ppears, as shown in Figure 3-64. In this screen, you can remove all content from the Show Library.

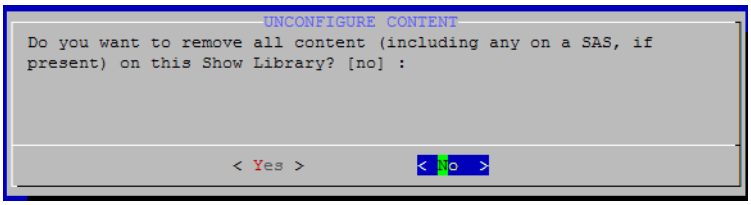

Figure 3-64 Unconfigure Content Screen

9. Select **Yes** or **No**, and then press <Enter>.

System Maintenance

4.1 Maintaining the DSS200 Internal Hard Drives

If one of the DSS200's internal hard drives fails, its corresponding front-panel LED turns from green to red, as shown in the example in Figure 4-1.

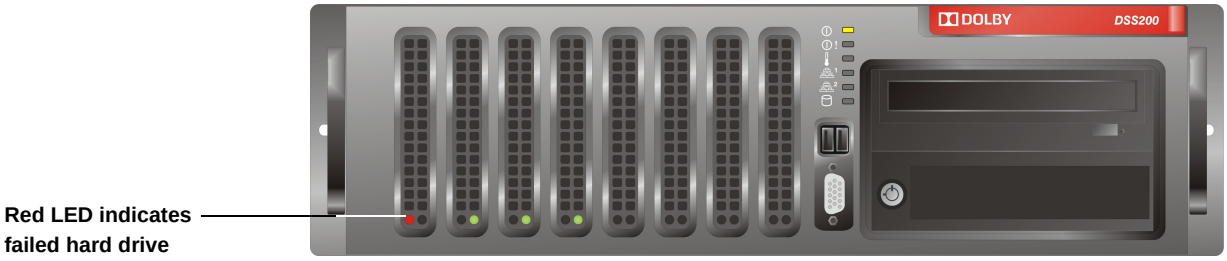

Figure 4-1 Identifying a Failed Drive in the DSS200

If a drive fails while a show is running, the show continues to run without interruption. If one drive fails, no information is lost. If a second drive fails before you fix (or replace) the first failed drive, all information is lost (and any show in progress stops running). For this reason, you should fix (or replace) a failed drive as soon as possible.

Note: A drive LED may turn from green to red if one or more of the DSS200 internal hard drives is dislodged during shipment or relocation. For this reason, before attempting to replace a drive, power down the unit and re-insert the failed drive. After re-inserting, the drive may function properly. For re-inserting instructions, refer to Section 4.1.1; re-inserting is similar to removing and inserting a replacement drive.

The system automatically rebuilds a replacement (or reinserted) drive, but there are some instances when you may need to rebuild manually. For information on manually rebuilding drives, see the TMS online help.

4.1.1 Replacing a DSS200 Drive

To replace a DSS200 internal hard drive:

1. Note the front-panel drive that needs replacement, indicated by its red LED.
2. Remove the front-panel cover by placing a finger on the cover's indented area (in the upper-right corner), while pressing inward (to the left) and gently pulling the cover out of the front panel (see Figure 4-2).

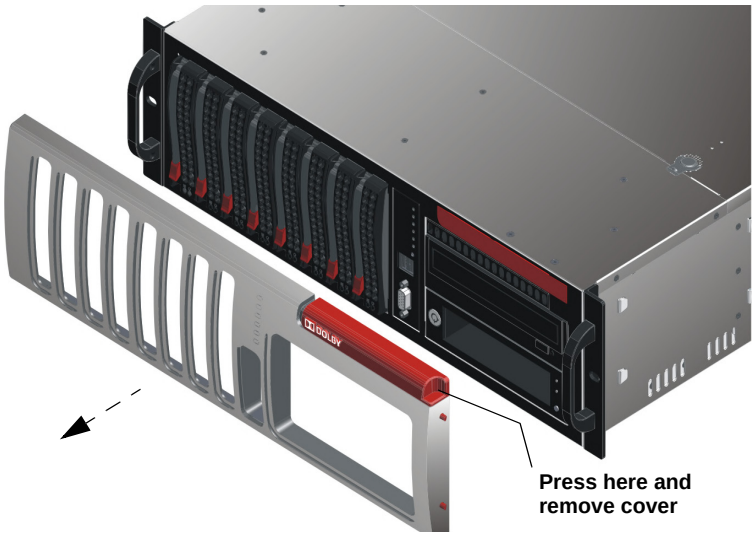

Figure 4-2 Remove DSS200 Front-Panel Cover

3. Press the failed drive's red release button to extend the drive tray handle, then use the handle to pull the drive tray out of the DSS200 chassis, as shown in Figure 4-3.

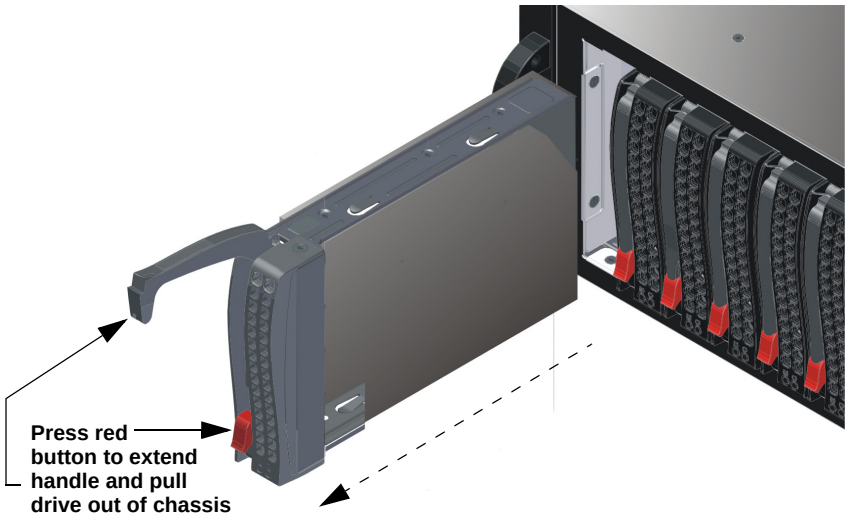

Figure 4-3 Press Release Button to Extend Handle and Remove Drive

4. Place the drive tray on a flat, stable surface such as a desk, table, or work bench.
5. Use a Phillips screwdriver to remove the six screws securing the failed drive to the drive tray, then lift the drive out of the tray, as shown in Figure 4-4.

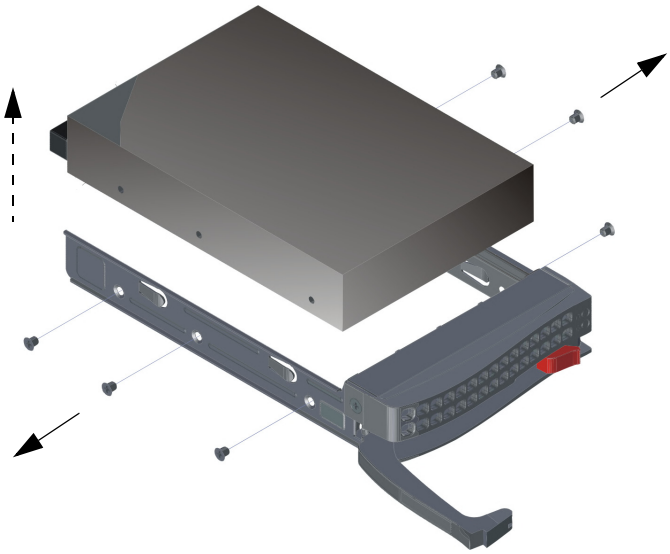

Figure 4-4 Removing the Failed Drive from the DSS200 Drive Tray

6. Slide the replacement drive (Dolby Part Number 8702640) into the tray with the printed circuit board facing down, as shown in Figure 4-5.

   You can replace a drive with a higher-capacity unit, but not with a lower-capacity unit.

7. Carefully align the mounting holes on the drive and the tray.

   Make sure the bottom of the drive and the bottom of the tray are flush.

8. Use a Phillips screwdriver to secure the drive to the drive tray using all six screws you removed in step 4.

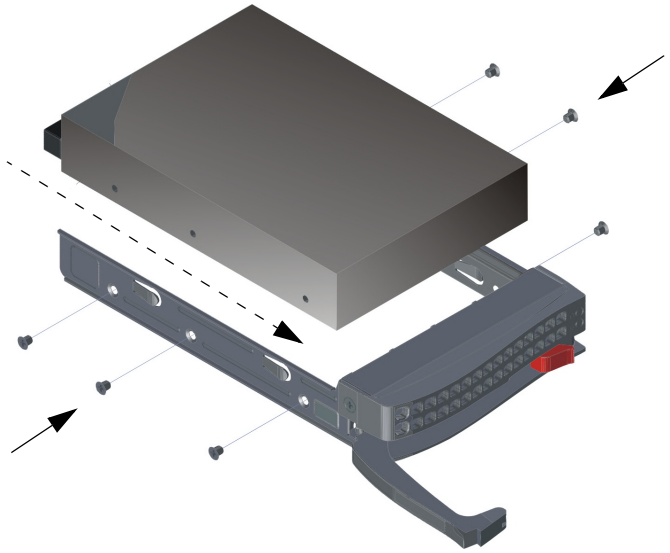

Figure 4-5 Installing the Replacement Drive in the DSS200 Drive Tray

9. Slide the drive tray into the chassis, pressing down on its handle until it snaps into place, as shown in Figure 4-6.

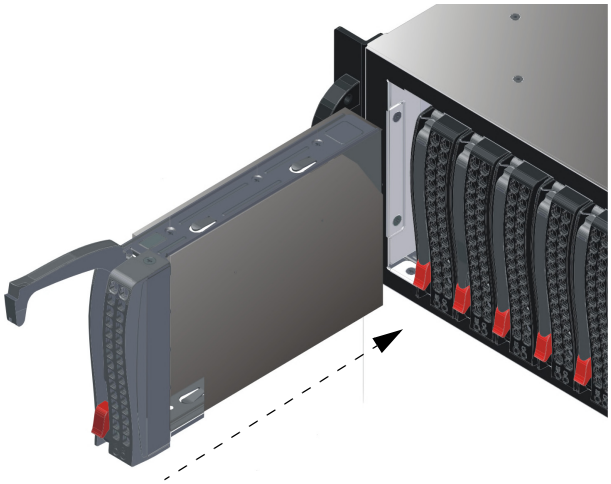

Figure 4-6 Slide Drive into DSS200 Chassis

10. Replace the front-panel cover:

- Line up the two pins on the cover's left side with their respective holes on the front panel, then insert the pins in the holes.
- Place a finger on the cover's right indent, press inward to depress the two pins, line up the pins with their respective holes, then release your finger to insert the pins and snap the cover in place (see Figure 4-7).

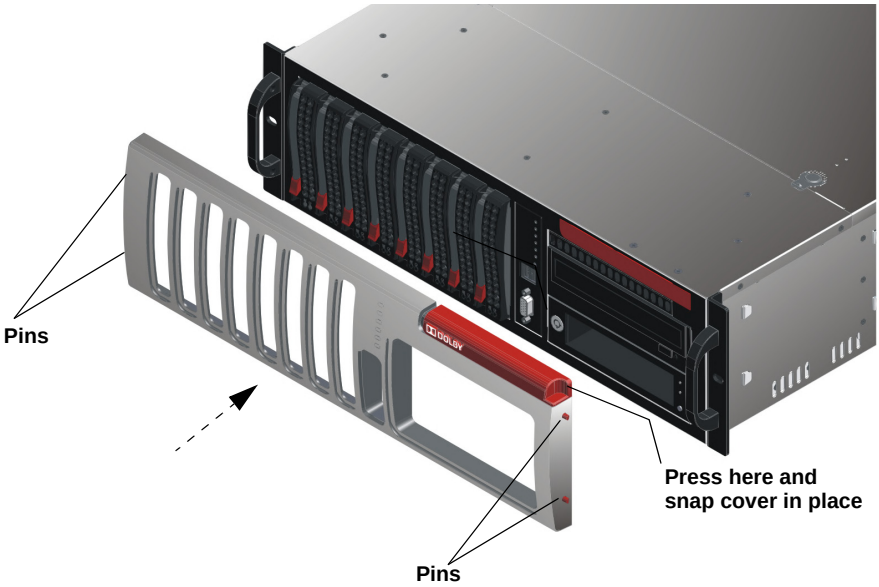

Figure 4-7 Replace Front-Panel Cover

11. The system automatically rebuilds the replacement drive.

    The rebuild process partitions larger drives to the same size as the existing internal drives. There are some instances when you may have to rebuild a drive manually. For information on rebuilding drives manually, see the TFMS online help.

4.2 Replacing a DSS200 Power Supply

The DSS200 requires only one power supply; a second unit is provided for backup. If a problem occurs with either of these redundant power supplies, the power failure indicator LED on the front panel changes from green to flashing red (see Figure 4-8). You can replace a failed power supply (Dolby Part Number 4901580) during a show, but to avoid accidentally removing the wrong unit, wait until the theatre is empty (as the system continues operating with one power supply).

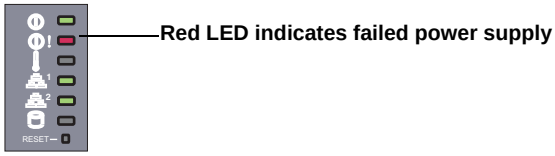

Figure 4-8 DSS200 Front-Panel Power Supply Indicator

To replace a DSS200 power supply (refer to Figure 4-9):

1. Identify the failed unit on the DSS200 rear panel by its nonilluminated LED.
2. Unplug the power cable from the failed power supply.
3. Push down on the unit's red release tab.
4. Grasp the handle to pull the unit out of its bay.

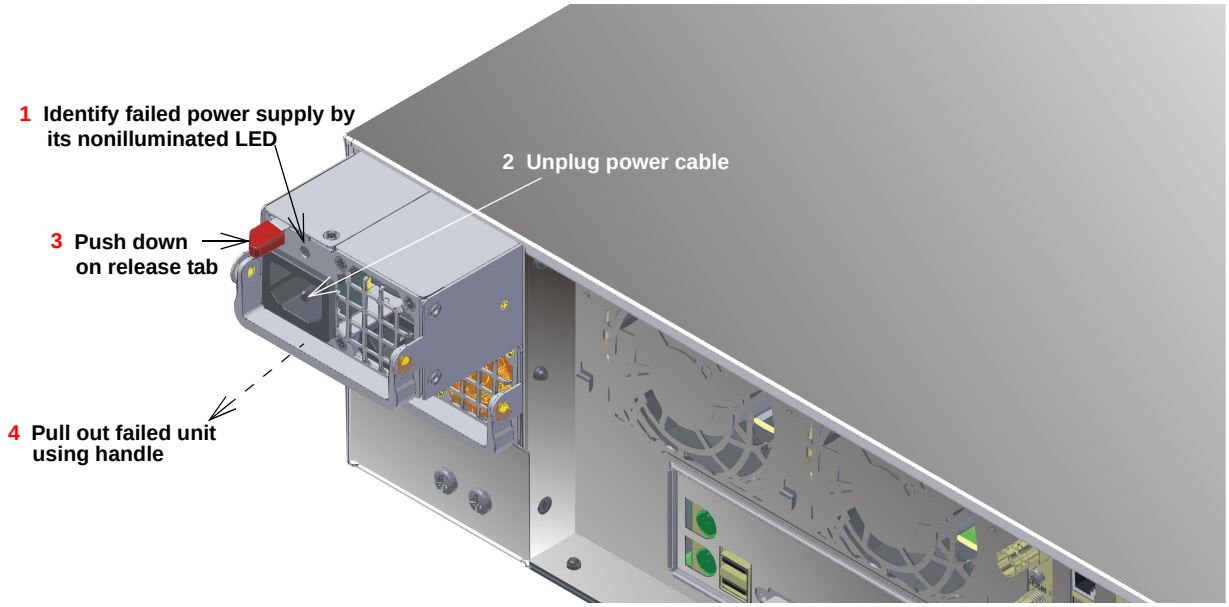

Figure 4-9 Removing the Failed DSS200 Power Supply

5. Push the replacement power supply into the empty bay until you hear a click.
6. Plug the power cable into the replacement unit. Its LED and the front-panel LED should both illuminate in green.

4.3 Replacing a System Fan

The DSS200 contains five heavy-duty system fans. Three of these fans are located in the front of the chassis, and two are located in the rear. The fans circulate air to lower the DSS200 chassis' internal temperature. They are fully hot swappable and you can remove and replace them without having to power down the unit.

Before replacing a front or rear fan, open the chassis cover as follows (see Figure 4-10):

1. Press the release tabs to remove the cover from the locked position.

   Press both tabs at the same time. If necessary, you may need to remove the chassis cover screw.

2. Once the top cover is released from the locked position, slide the cover toward the rear of the chassis and lift the cover off the unit.

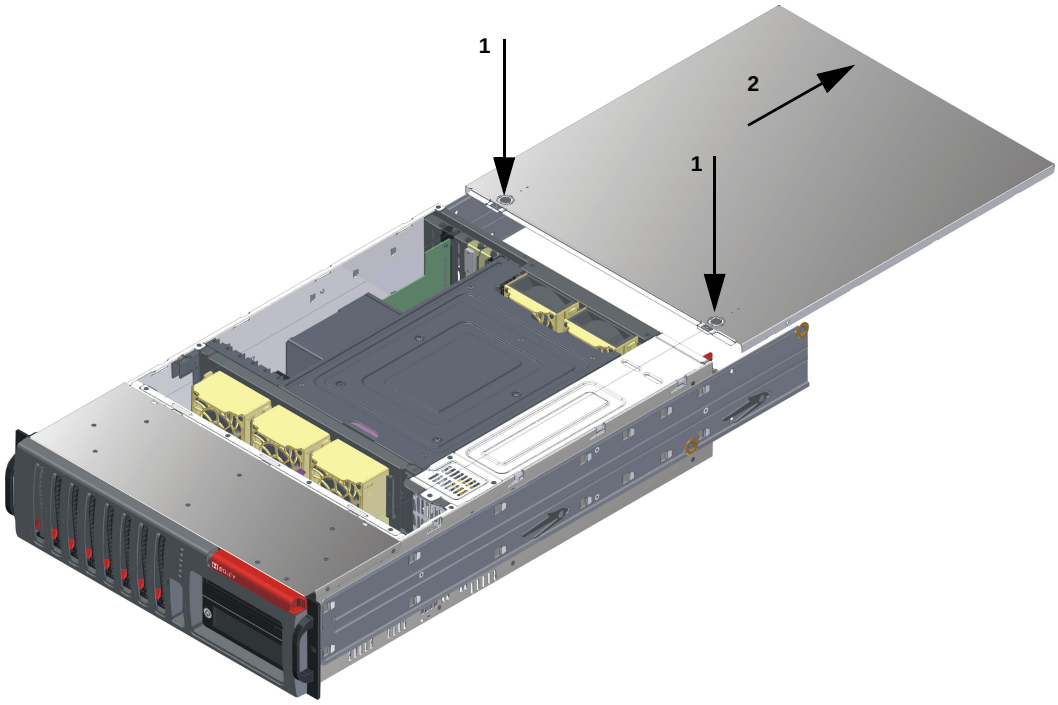

Figure 4-10 Removing the DSS200 Chassis Cover

Warning: Except for short periods of time, do not operate the DSS200 with the cover removed. The chassis cover must be in place to allow proper airflow and prevent overheating.

To replace a front fan (Dolby Part Number 5700920):

1. Locate the faulty fan.
2. Press the release tab on the fan and pull the faulty fan upward.
3. Slide the new fan into the fan housing, as shown in Figure 4-11.
4. Be sure the power connectors are correctly aligned. The new fan will be immediately active.

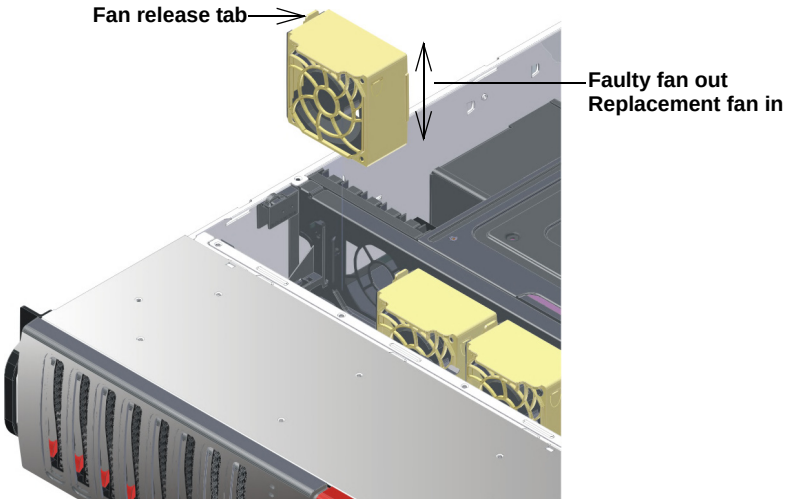

Figure 4-11 Replacing a DSS200 Front System Fan

To replace a rear fan (Dolby Part Number 5700930):

1. Locate the faulty fan.
2. Press the release tab on the fan and pull the faulty fan upward.
3. Slide the rear fan into the slot, as shown in Figure 4-12.
   The fan release tab is on the side closest to the power supply.
4. Be sure that the fan is secure in the fan housing and the housing is correctly connected to the power supply.

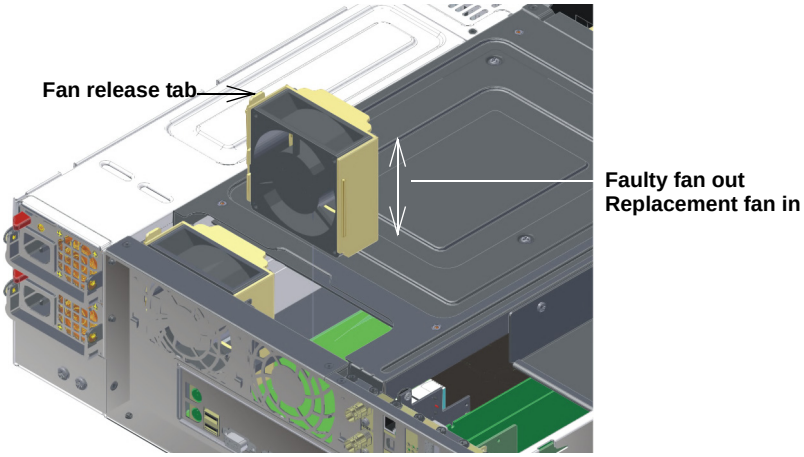

Figure 4-12 Replacing a DSS200 Rear System Fan

4.4 Maintaining the DSL100 Internal Hard Drives

If one of the DSL100 internal hard drives fails, its corresponding front-panel LED turns from green to red, as shown in the example in Figure 4-13.

In the DSL100 RAID 6 configuration, if one or two drives fail while a show is running, the show continues to run without interruption. If two drives fail, no information is lost. If a third drive fails before you replace one of the first two failed drives, all information is lost (and any show in progress stops running). For this reason, you should replace a failed drive as soon as possible.

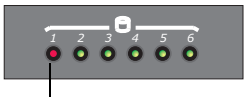

Figure 4-13 Identifying a Failed Drive in the DSL100

Note: A drive LED may turn from green to red if one or more of the DSL100 internal hard drives is dislodged during shipment or relocation. For this reason, before attempting to fix or replace a drive, power down the unit and reseat the failed drive. After reseating, the drive may function properly. For reseating instructions, refer to Section 4.1.1; reseating is similar to removing and inserting a replacement drive.

The system automatically rebuilds a replacement drive (or a reseated drive), but there are some instances when you may have to rebuild a drive manually. For information on rebuilding a drive manually, see the TMS online help.

Final Operations

After the software installation, you will need to reconfigure your settings and reload your content.

4.4.1 Replacing a DSL100 Drive

To replace a DSL100 internal hard drive:

1. Note the front-panel number that corresponds to the problem drive (the number next to the red LED).
2. Remove the DSL100 front panel by placing one hand on its left side and one hand on its right side, then pulling it toward you until it disengages from the main unit, as shown in Figure 4-14.

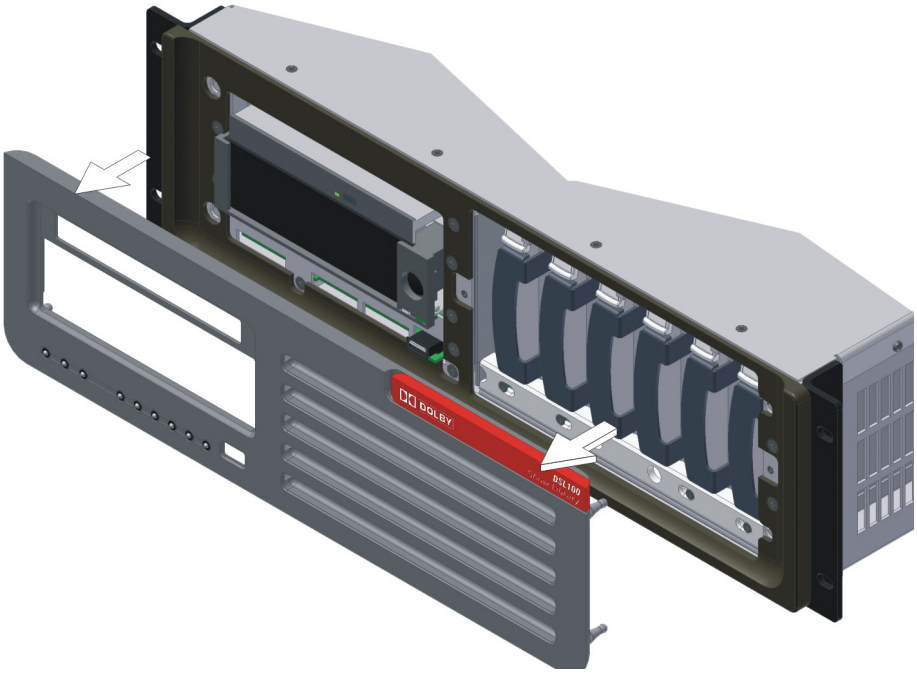

Figure 4-14 Removing the DSL100 Front Panel

3. Use a Phillips screwdriver to loosen the four screws that secure the drive retaining bracket, then remove the bracket as shown in Figure 4-15.

Caution: When loosening the screws, be sure *not* to remove them completely from the bracket.

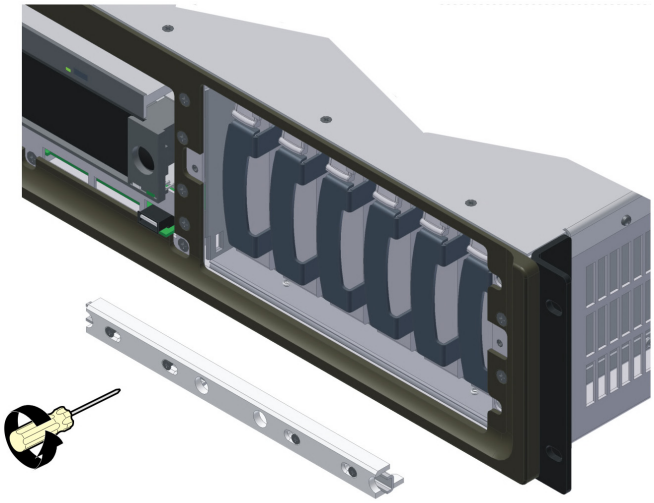

Figure 4-15 Removing the DSL100 Retaining Bracket

4. Match the failed drive's number (noted in step 1) with the corresponding numbered internal drive, then grasp the drive's finger tab and slide it out of its slot, as shown in the example in Figure 4-16. The drives are numbered from left to right (1, 2, 3, 4, 5, 6).

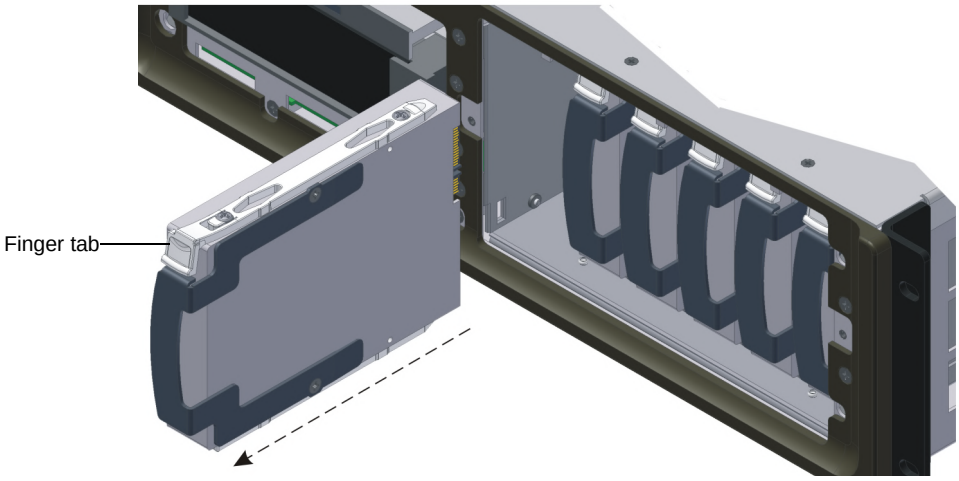

Figure 4-16 Removing the Failed Drive from the DSL100

5. Be sure that no show is running, then grasp the replacement drive's finger tab, and firmly but gently slide the drive into its slot (see Figure 4-17) until you feel resistance, which indicates that the drive is seated in its socket.

   A replacement drive must be the same capacity or larger than the other drives in the system.

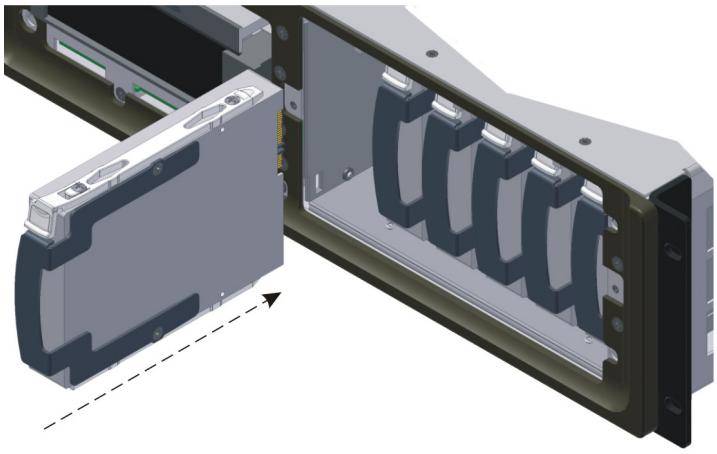

Figure 4-17 Inserting the Replacement Drive in the DSL100

6. Position the retaining bracket in front of the internal drives, lining it up with the screw holes, then use a Phillips screwdriver to reinstall its six screws and secure the drives, as shown in Figure 4-18.

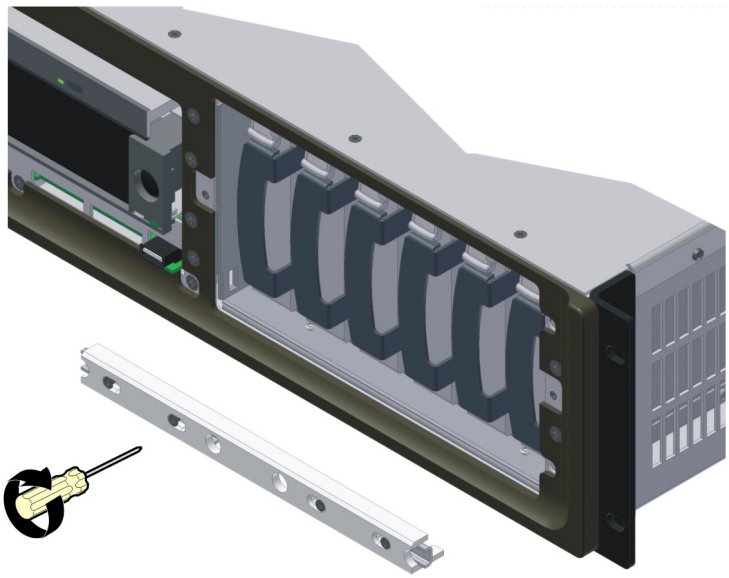

Figure 4-18 Reinstalling the DSL100 Retaining Bracket

7. Grasp the front panel on its left and right sides, line up its four mounting studs with the main unit's four holes (one in each corner), then push until it snaps into place, as shown in Figure 4-19.

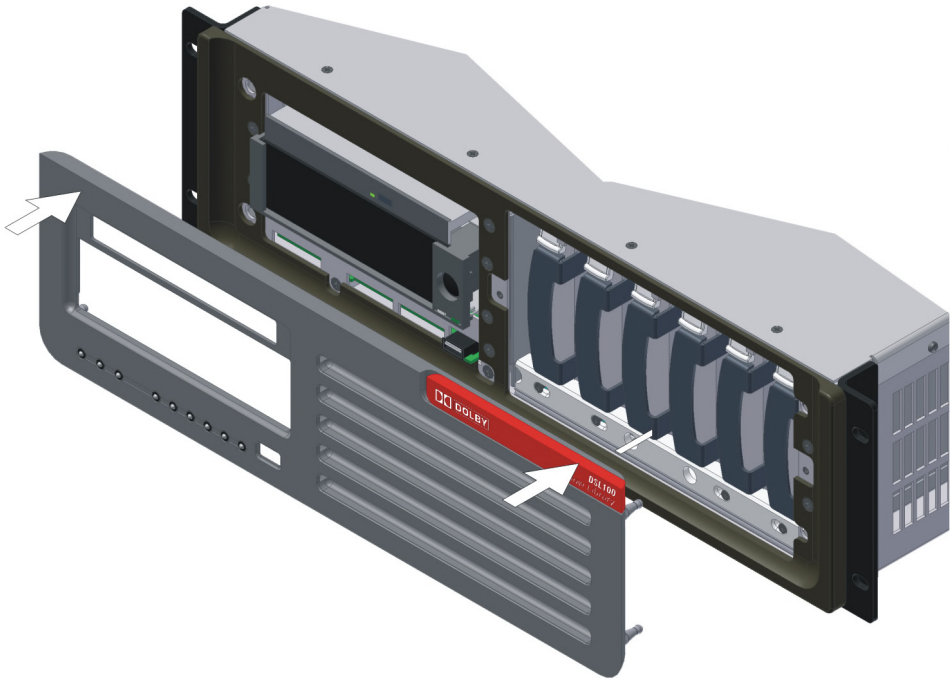

Figure 4-19 Reinstalling the DSL100 Front Panel

The DSL100 automatically rebuilds the RAID 6 array. When you insert a replacement drive, the rebuild automatically begins within a few seconds. If a drive time-out occurs, the DSL100 automatically rebuilds the array when it detects the drive again. During the rebuild process, the red drive LED immediately goes out and all the drive LEDs blink in green. When the rebuilding process is completed, the internal drive LEDs stop blinking.

There are some instances when you may have to rebuild a drive manually. For information on rebuilding a drive manually, see the TMS online help.

4.5 Replacing a DSL100 Power Supply

The DSL100 requires only one power supply; a second unit is provided for backup. If a problem occurs with either of these redundant power supplies, the power failure indicator LED on the front panel flashes red (see Figure 4-20) and a warning alarm sounds. The Dolby® Cat. No. for each of your DSL100's power supplies is identified by a label affixed to the right side of each unit.

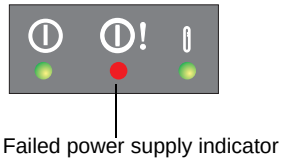

Figure 4-20 DSL100 Front-Panel Power Supply Indicator

To replace a DSL100 power supply:

1. Identify the failed unit in the rear panel by its nonilluminated LED, as shown in the example in Figure 4-21.

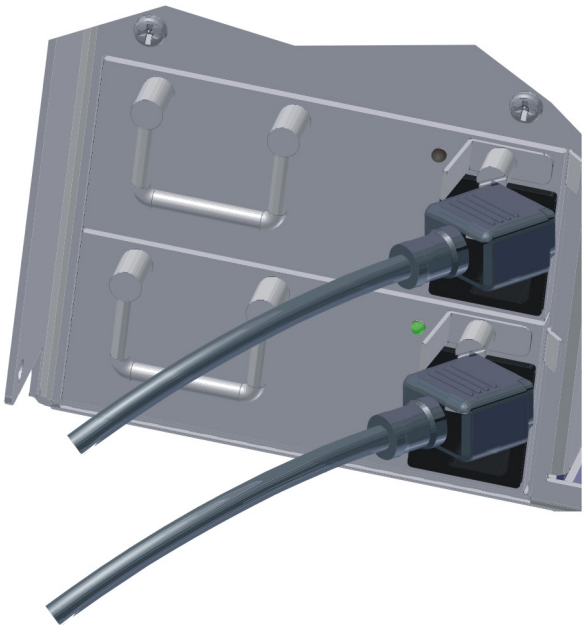

Figure 4-21 DSL100 Failed Power Supply: Top Unit in Figure

2. Press the red **Power Supply Alarm Reset** button to turn off the warning alarm, then disconnect the power cable on the failed power supply and loosen the unit's thumbscrew by turning it counterclockwise, as shown in Figure 4-22.

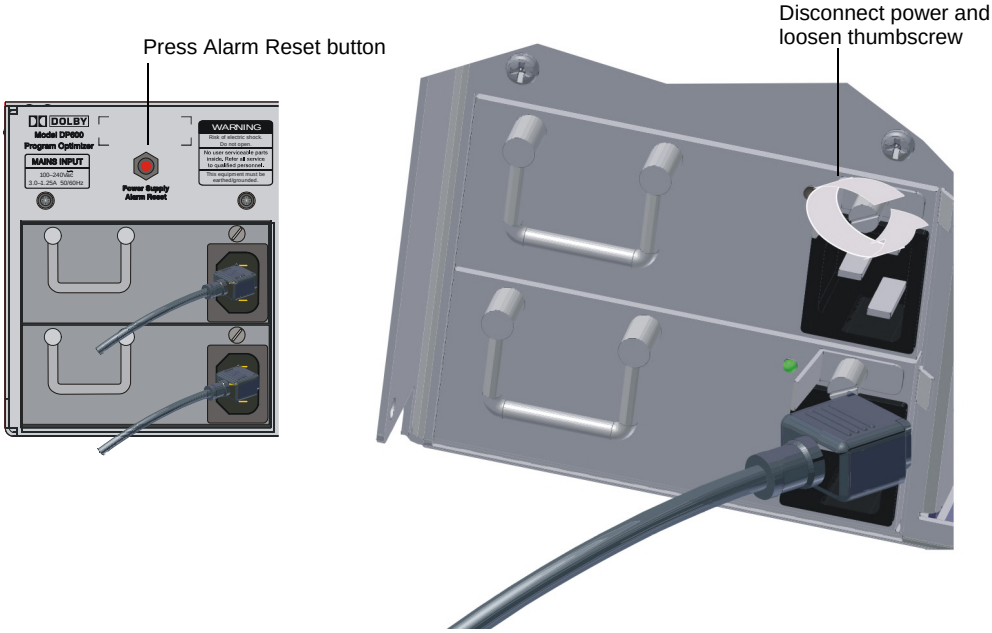

Figure 4-22 Loosen Thumbscrew on Failed DSL100 Power Supply

3. Press the failed power supply's tab to the left while grasping its handle (see Figure 4-23) and pulling the unit out of its slot (see Figure 4-24).

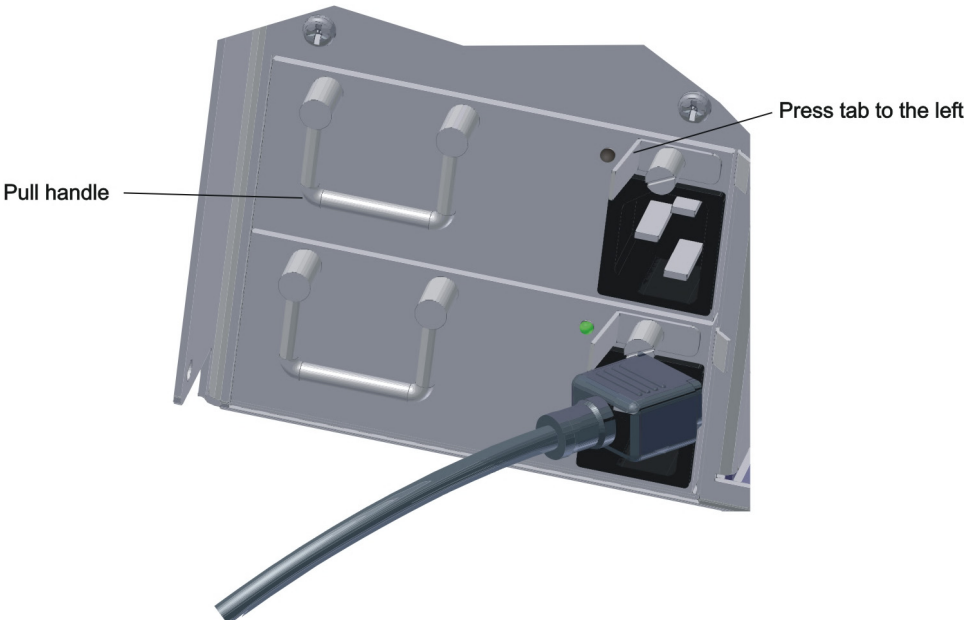

Figure 4-23 Press on Tab and Pull Handle to Remove Failed DSL100 Power Supply

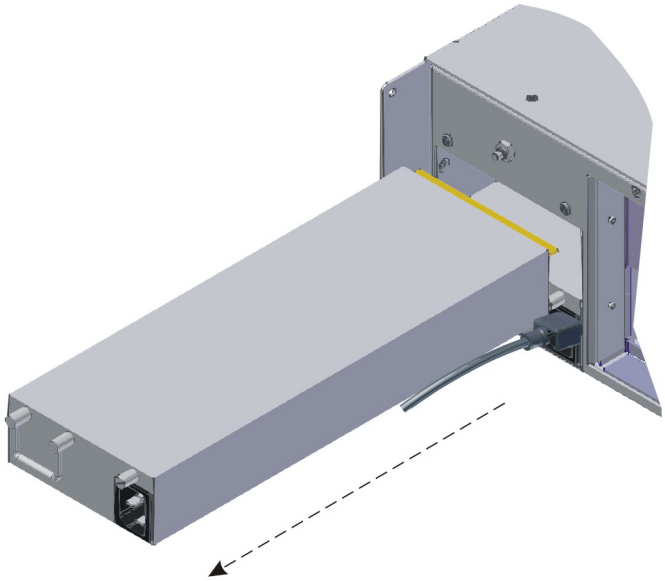

Figure 4-24 Remove Failed DSL100 Power Supply

4. Position the replacement unit squarely within its slot and push it along the guiding surface until it snaps into place, as shown in Figure 4-25.

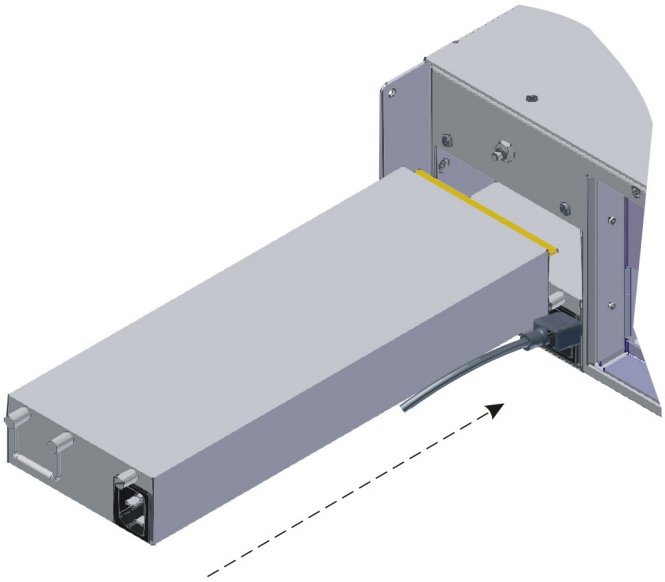

Figure 4-25 Install New DSL100 Power Supply

5. Tighten the thumbscrew by turning it clockwise, then reconnect the power, as shown in Figure 4-26.

   The replacement unit's LED turns green and the front panel's red LED turns off, verifying that the new unit is functioning correctly.

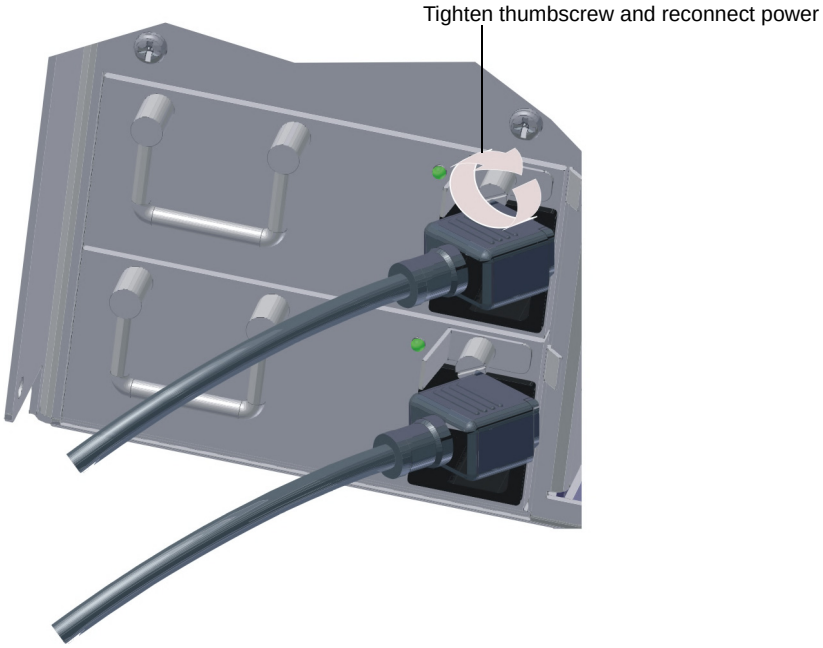

Figure 4-26 New DSL100 Power Supply Installed and AC Cable Reconnected

4.6 Updating the DSS200, Media Block, and TMS Software

You can update the DSS200, Media Block (CAT862), and TMS software using four methods:

- Upgrade CD and USB device
- Locally from a USB device connected to the DSS200
- Remotely using FTP and SSH
- Locally from a CD and a PC connected to the DSS200

4.6.1 Updating Using the Upgrade CD and a USB Device

Periodic updates to the DSS200, Media Block, and TMS software are distributed on the *Dolby DSS200 Upgrade* CD. This disc upgrades the DSS200 operating system and application, the TMS software, and the Media Block firmware. Existing content and any TMS schedule information, shows, and configurations remain intact. In addition, you'll need to obtain a CAT862 secured license file for the Media Block from Dolby Laboratories.

To update the DSS200, Media Block, and TMS software:

1. Obtain the *Dolby DSS200 Upgrade* CD and the Media Block license file from Dolby Laboratories.
2. Insert the upgrade CD in the CD/DVD-ROM drive.
3. Copy the `.kdm` (license) file to the top level (root directory) of a USB storage device, and insert the USB device in one of the unit's USB-A (flat) ports.
4. Power cycle the DSS200.

   The unit performs the upgrade and prepares for the Media Block upgrade.

   If you have the console displayed on your monitor, you can monitor the progress of the DSS200 upgrade. If you don't have the console displayed, TMS does not indicate the upgrade progress. When the upgrade is completed, the CD automatically ejects and a prompt tells you to remove the CD and power cycle.

5. Remove the CD and the USB device, then power cycle the unit.

   The unit takes several minutes to display TMS because it needs to upgrade the Media Block. You can monitor the Media Block upgrade progress on your monitor console.

Caution: Do not interrupt the upgrade process by trying to remove the CD or disconnecting the AC mains power.

4.6.2 Updating the DSS200, Media Block, and TMS Remotely

To perform a remote upgrade:

1. Open an FTP connection to the target system, and enter the user ID *dolbyftp* and password *dolbyftp*

   Make sure the mode is set to binary.

2. Upload the dlb and kdm (license) files.
3. Open an SSH connection to the target system, and enter the user ID *administrator* and the special password *dolby*
4. Enter *cd scripts/*

   The following scripts appear:

   - `listUpgradePackages.sh`—Lists the upgrade packages uploaded using FTP or available on a removable device
   - `executeUpgradePackage.sh`—Applies an upgrade package and reboots the system
   - `deleteUpgradePackage.sh`—Deletes a previously uploaded (via FTP) upgrade package.
   - `purgeSoftwareKDMs.sh`—Deletes previously uploaded software upgrade kdms

   The above commands must be prefixed with *./* using *local host* as the first parameter (steps 5 and 6 below show the correct usage).

5. Enter *./listUpgradePackages.sh localhost*

   The following output (or similar output) should appear:

```
Package ->

UUID: urn:uuid:01010100-683d-4fb3-be0e-580479c936c4

Filename: dcinema.dlb

System Version: 4.1.0 (b34) [14-May-09 15:25]

Show Store Version: 4.1.0 (b34)

Show Player Version: 4.0.5.1

IDC Version: 4.1.0.23

Store: MainStore

License Status: LICENSED

Issue Date: Thu May 14 17:26:44 GMT-07:00 2009
```

Note: The system passes the displayed information in the `UUID` and `Filename` fields to the *execute* and *delete* commands.

6. Enter *./executeUpgradePackage.sh localhost <filename> <store>*

   As shown in the example output, substitute *dcinema.dlb* for *<filename>* and *MainStore* for *<store>* from the package. The system unpacks the dlb file and automatically reboots.

7. After the unit reboots and is up and running, SSH back in as `administrator` and check the success of the upgrade, as described in Section 4.6.5.

4.6.3 Updating Locally from a USB Device Connected to DSS200

To update from a connected USB device:

1. Place the dlb file and kdm on a USB device and insert it into a DSS200 USB port.
2. Log in using the administrator login on a local console (user: `administrator` password: `dolby`).
3. Follow steps 4–6 in Section 4.6.2, but enter `USB` for `<store>`.
4. When the unit begins to reboot, disconnect the USB device.
5. After the unit reboots and is up and running, check the success of the upgrade, as described in Section 4.6.5.

4.6.4 Updating Locally from a CD and a PC Connected to a DSS200

This method uses the *DSS200 Upgrade* CD to update the DSS200 and TMS and the *Dolby Software Update* application to update the Media Block.

To update the DSS200 and TMS:

1. Obtain the *DSS200 Upgrade CD* from Dolby Laboratories.
2. Insert the DSS200 upgrade CD into the DSS200's CD/DVD-ROM drive.
3. Power cycle the DSS200 to reboot the unit.

   The drive activity LEDs blink intermittently and the DSS200 temperature LED on the front panel flashes in green while the system automatically performs the upgrade.

Caution: Do not interrupt the upgrade process by trying to remove the CD or disconnecting the AC mains power.

   If a monitor is connected to the DSS200 and the console is displayed, messages appear confirming the upgrade process. When the upgrade is completed (after approximately 10 minutes), the temperature LED stops flashing and turns solid green.

4. Power cycle the DSS200 to reboot the unit.
5. Remove the upgrade CD.

To update the DSS200 Media Block:

1. Obtain the upgrade dlb file and the corresponding license file from Dolby Laboratories and copy these files to the PC (or a USB device connected to the PC).
2. Connect the PC to the Setup/Update USB port on the DSS200's rear panel.
3. Power cycle the DSS200.
4. Launch the *Dolby Software Update* application and wait until it connects.
5. Select the dlb update file.
6. Select the license file corresponding to the update dlb file.
7. Click the **Update** button.
8. After the update application confirms that the process is completed, unplug the USB cable from the DSS200 and the PC.
9. Power cycle the DSS200.

4.6.5 Checking the Success or Failure of an Update

Check the versions of all components, either with TMS, the logs (the *administrator* login has read-only access to /status/log via remote access), or the getAllParameters.sh script (the *administrator* login can also access this remotely in the scripts/directory). Enter *./getAllParameters.sh <ip address>* to determine the internal state of the software.

For the DSS200/TMS, export the logs and check the upgrade_script.log file in the DSS200 devel log.

For the CAT862 (Media Block), check the /status/log/upgrade_app.log, or export the logs and check it in the DSS200 devel log.

4.6.6 Other Updating Information and Available Actions

The DSS200 remembers any software upgrade kdm it sees, so if the system already has the kdm you need, you can skip the kdm install process.

The DSS200 installs any kdm from a connected removable storage device. This means you can install kdms by simply placing them on a USB stick, inserting it, and removing it once the system scans the device.

4.7 Updating DSL100 and TMS Software

Periodic updates to the DSL100 and TMS software are distributed on the *Dolby DSL100 Upgrade* CD. Existing content and any TMS configurations remain intact.

To update the DSL100 and TMS software:

1. Insert the DSL100 upgrade CD into the unit's CD/DVD-ROM drive.
2. Power cycle the DSL100 to reboot the unit.

   The drive's activity LED blinks intermittently and the Show Library's temperature LED on the front panel flashes in green while the system automatically performs the upgrade.

Caution: Do not interrupt the upgrade process by trying to remove the CD or disconnecting the AC mains power.

   If a monitor is connected to the Show Library, messages appear confirming the upgrade process. When the upgrade is completed (after approximately ten minutes), the temperature LED stops flashing and turns solid green.

3. Power cycle the DSL100 to reboot the unit.
4. Remove the upgrade CD.

4.8 Updating the DSL100 and TMS Remotely and Via USB

This is similar to the DSS200 procedures in Section 4.6.2 and Section 4.6.3, but there is no kdm required for the DSL100.

4.9 Troubleshooting

If you experience any problems with the Dolby Digital Cinema system, check Table 4-1 for possible solutions. If you cannot resolve your problem using the table, contact your Dolby authorized technical representative.

Table 4-1 Troubleshooting Quick Reference

Problem	Verify	Action
No sound in auditorium	* Show is playing by checking TMS. * Processor is set to the assigned digital cinema format. * Processor is not in mute and fader is at 7.0. * Amplifiers are switched on.	Select content and press play button to start show. Select a different Show or Clip. Select assigned digital cinema format. Press mute button to unmute processor and set fader to 7.0. Power on amplifiers.
No picture on screen	* Projector is on. * Media Block is connected to projector. * Show is playing by checking TMS * Correct projector inputs are being used.	Turn projector on. Connect Media Block to projector. Secure DSS200 to Media Block connection. Select content and press play button to start show. Connect Media Block to correct projector inputs.
Cannot project 3D shows in 3D	* Digital projector set for 3D. * Additional equipment for 3D glasses is functioning. * Media Block HD-SDI links A and B connected to respective digital projector ports. * Media Block is configured for correct 3D mode.	Set projector for 3D playback. Authorized installer set up equipment for 3D glasses. Connect Media Block A and B HD-SDI links to respective digital projector ports. Configure Media Block for 3D mode.
Auditorium event cues not functioning	* Show has event cues. * NA10 is present in auditorium and powered on. * NA10 is not in offline mode. * Breaker is not switched off. * Network switch is turned on—are network lights flashing?	Configure event cues in TMS. Properly install NA10 and power on. Place NA10 in online mode. Turn on breaker. Turn on network switch.
Film projector cues not functioning	*Cues on NA10 are set properly.	Power cycle NA10 to reset cues.
Media Block cannot connect to DSS200	*DSS200 is powered on. *Dedicated Ethernet connection between DSS200 and Media Block is connected.	Power on DSS200. Connect DSS200 to Media Block. Secure all connections.
Unable to transmit or receive on theatre network using fiber Ethernet ports	*Fiber Ethernet cables are properly connected to DSS200 and theatre network switch.	Secure connections to theatre network switch. Reverse the two fiber Ethernet cables and reconnect to fiber Ethernet ports on DSS200.
TMS does not appear on connected monitor.	* System is installed and configured properly.	Repeat the installation and configuration instructions in Chapter 3.

Dolby Digital Cinema Specifications

A.1 DSS200 (With Media Block) General Specifications

Image Decoding

Purpose-designed digital cinema image decoder supports content in JPEG 2000 and MPEG-2 formats; JPEG 2000 maximum bit rate 250 Mbps; supported frame rates 2D @ 24 and 48 fps, 3D @ 24 fps; progressive scan 2,048 × 1080; MPEG-2 maximum bit rate 140 Mbps; supported frame rates 23.98, 24, 25, 29.97, 30 fps; progressive scan 1,920 × 1,080; MP@HL

Packaging Format

Supports MPEG Interop, JPEG Interop, and SMPTE packaging formats

Audio Processing

16-channel audio on 8 × AES/EBU balanced digital audio outputs

Security

2,048-bit RSA decryption for key delivery; 128-bit AES decryption for content; internal security manager for secure image and sound processing, SMPTE security logging, secure real-time clock; supports insertion of both video and audio watermarking; supports industry-standard key delivery messages (KDM) and TI™ CineLink™ II, Diffie-Hellman, and TLS

Subtitles

Supports TI CineCanvas™ and SMPTE 428-7-2007 subtitles

Content Hard-Disk Drives

RAID 5 system for redundancy; user-serviceable,
hot-swappable hard-disk drives;
1.3 TB or 3.0 TB, depending on your unit

Power Requirements

100–240 VAC, 50–60 Hz, 250 W designed to operate from a centrally switched power source; dual redundant power supply

Dimensions and Weight

3-U rackmount chassis; 686 × 483 × 133 mm (27 × 19 × 5.25 inches); net: 29.5 kg (65 lbs) with CAT862

Environmental Conditions

Operating 0°C–40°C (32°F–104°F), fan cooling, 20%–80% relative humidity (noncondensing)

Automation Options

Digital Failsafe option enables "lights on" automation if playback stops; Serial RS-232 port directly connects to cinema automation with serial control; Ethernet directly connects to cinema automation with Ethernet control; GPI/O option provides an interface for connecting to a contact closure automation system that is capable of utilizing a GPI/O connection; this interface provides six optically isolated inputs capable of standard 15 volt automation control or TTL level control

Regulatory Notices

UL, FCC, CE, and RoHS compliant

A.2 DSS200 Front Panel Specifications

Removable Media: Industry-standard removable hard-disk drive bay and DVD-ROM drive for content and key delivery
Status LEDs: Bicolor LEDs show status of power supply, temperature, and internal hard disk drives
USB 2.0: Type A connector for key or content delivery, optional keyboard/mouse input
Monitor Output: 15-pin high-density female D-connector for optional VGA-compatible monitor to display user interface

A.3 DSS200 (With Media Block) Rear Panel Specifications

USB 2.0: Two type A connectors (and two PS/2 connectors), for optional keyboard and mouse to operate user interface
Network Connections: Three RJ-45 female connectors; 10/100/1,000Base-T with auto detection for auditorium network, theatre network, and future expansion; 1,000Base-LC optical fiber (optional, for theatre network)

Serial Data

9-pin male D-connector, RS-232

General Purpose Input/Output

Digital Failsafe option to enable "lights on" automation if playback stops; possible future expansion; GPI/O option provides an interface for connecting to a contact closure automation system that is capable of utilizing a GPI/O connection

Monitor Output

15-pin high-density female D-connector for optional VGA-compatible monitor to display user interface

Image Output

Two BNC female connectors, 75Ω, HD-SDI per SMPTE 292M

Digital Audio Output

25-pin male D-connector, 16-channel output on 8 × AES/EBU balanced, 110Ω, transformer isolated, per AES3-1992

Timecode Output

BNC female connector, unbalanced, output impedance 50Ω per SMPTE 12M

Video Reference I/O

BNC female connector, can be switched between input and output; in output mode (the default), the reference signal automatically matches the content being played

A.4 Show Library General Specifications

Content Hard-Disk Drives
Fully redundant RAID 6 system, 2.8 TB or 3.8 TB, depending on your unit

Power Requirements
100–240 VAC, 50–60 Hz, 500 W maximum
Dual redundant power supply designed to operate from a centrally switched power source

Dimensions and Weight
3-U rackmount chassis; 132 x 483 x 580 mm (5.25 x 19 x 23 inches); net: 19.5 kg (43 lb)

Environmental Conditions
Operating: 0°C–40°C (32°F–104°F), fan cooling, 20%–80% relative humidity (noncondensing)

A.5 Show Library Front Panel Specifications

Removable Media
Removable hard-disk drive
DVD-ROM drive for software updates

Status LEDs
Bicolor LEDs show status of power supply, temperature, and internal hard-disk drives

USB 2.0
Type A connector

A.6 Show Library Rear Panel Specifications

USB 2.0
Two Type A connectors

PS/2
Two PS/2 connectors for keyboard and mouse (not supplied)

Network Connections
Three 10/100/1000 Base-T (RJ-45) female connector for connections to local theatre networks and larger LANs
Optional 1000Base-SX SC optical fiber connector

Monitor
15-pin standard connector for VGA monitor (not supplied)

Digital Audio Overview

The following digital audio overview is provided as an informational supplement that may help you in the installation process. Some of this information relates directly to Dolby® Digital Cinema, while other sections refer to other Dolby products.

B.1 Digital Audio Sources

Dolby Digital Cinema processors and decoders accept a wide range of digital audio sources, including:

- Digital cinema servers
- Professional digital video tape recorder (VTR)
- Preshow servers
- Satellite receivers
- DVD/Blu-ray Disc™ players with Dolby Digital
- CD players
- Alternative content sources

A range of digital audio formats are also accepted by Dolby cinema processors and decoders, including:

- PCM
- Dolby Digital up to 5.1 channels
- Dolby Pro Logic®/Pro Logic II
- Dolby Digital Surround EX™
- Dolby E

B.2 Digital Audio Inputs

There are two professional interface formats used for digital audio: AES/EBU (also known as AES3) and AES-3id. These stream the same digital data and professional audio header information over copper conductor links, but use different types of conductors and connectors. AES/EBU uses a balanced connection (two conductors plus shield) with a characteristic input impedance of 110Ω, nominal peak-to-peak signal level of 5 V, and, most commonly, XLR connectors. The typical maximum transmission distance is 1000 m (3280 ft). AES-3id uses an unbalanced connection (one signal conductor plus shield) with a characteristic input impedance of 75Ω, peak-to-peak signal level of 1 V, and BNC ("push and twist") connectors. The typical maximum transmission distance is 100 m (328 ft).

B.3 Consumer Interface Standards for Digital Audio

The consumer interface standard for digital audio is S/PDIF (IEC 61937). S/PDIF uses coaxial unbalanced connections (one signal conductor plus shield) with a characteristic input impedance of 75Ω with RCA (phono) connectors, or a fiber-optic cable with Toslink™ connectors. The unbalanced coaxial connection has a peak-to-peak signal level of 0.5 V. The typical maximum transmission distance is 10 meters (33 ft). Although S/PDIF-specific cables with suitable connectors can be purchased, you can also obtain good results using high-quality 75Ω video cable with the appropriate connectors and/or adapters.

B.4 Cable Issues

Even in digital audio, noise-free signals are very important. The cable used for digital signals is specifically designed for such use, although it looks the same as cable used for analog audio or video signals. Any professional audio equipment or broadcast supply company can provide 110Ω cable with connectors (or without, if you'd like to terminate them yourself) for AES/EBU connections, and high-quality 75Ω video cables with BNC connectors for AES-3id connections. Use of cables or connectors not designed for digital transmission or with incorrect impedance compromises the integrity of the bitstream. This can result in unreliable hardware interconnections, especially with long cable runs.

HD-SDI Video Overview

C.1 Introduction

The DSS200 provides a dual HD-SDI video output per SMPTE 372M (that is, consisting of a pair of SMPTE 292M outputs). The data rate for each cable is 1.458 Gbps, resulting in a bandwidth of 750 MHz. As a result, be sure you choose the correct cable and connectors, and handle the cable with care.

The main issue with digital video connectivity is return loss, which measures the reflected signal that results from impedance discontinuities within the cable and related connectors. In the worst case, return loss causes dropouts in the projected video signal.

C.2 Connector Issues

The majority of analog BNC connectors have an impedance of 50Ω. To prevent return loss issues, digital video requires 75Ω connectors.

C.3 Cable Issues

Take the following precautions when installing HD-SDI cables:

- Do not step on or otherwise crush the cable.
- Do not tie the cable extremely tight, which can cause problems when pulling it during installation.
- Do not twist the cable by exceeding it's minimum bend radius (nominally ten times the cable diameter)
- Be very careful when pulling the cable through a conduit.

If you do not take all of the above precautions, this can physically deform the cable dielectric, which in turn causes the cable impedance characteristics to vary, and affects the return loss.

The maximum cable run is 50 m/164 ft, but often a minimum length is also required to maintain the return loss.

Digital Cinema Keyboard Shortcuts, Login Utilities, and Scripts

D.1 Introduction

The Dolby® Show Library and the DSS200 run several applications and utilities. Following is a description of each of their respective functions.

D.1.1 Show Library

The Show Library runs three main applications:

- Show Library (content management)
- TMS Server
- TMS Client (UI)

Each of these writes log entries to files as well as to one of the virtual consoles available to the user:

- <Ctrl> + <Alt> + <F5> Show Library console
- <Ctrl> + <Alt> + <F6> TMS Server console
- <Ctrl> + <Alt> + <F7> TMS Client console
- <Ctrl> + <Alt> + <F8> TMS Client graphical user interface (GUI) - primary console

D.1.2 DSS200

The DSS200 runs the same applications whether it is networked with a Show Library or used as a stand-alone unit:

- DSS200 (content management, streaming)
- SMS/TMS Server
- SMS/TMS Client (GUI)

Each of these writes log entries to files as well as to one of the virtual consoles available to the user:

- <Ctrl> + <Alt> + <F5> DSS200 console
- <Ctrl> + <Alt> + <F6> SMS Server console
- <Ctrl> + <Alt> + <F7> SMS Client console
- <Ctrl> + <Alt> + <F8> SMS Client GUI (primary console)

D.1.3 DSS200 and TMS Login Utilities

The DSS200 provides various utilities that you can access using special login names. Access a login prompt by typing <Ctrl> + <Alt> + <F1> (<F2>, <F3>, and <F4> also provide login consoles), then enter the password `dolby`

Config

When you type `config` at the login prompt and enter `dolby` at the password prompt, this utility provides numerous configuration options including:

- Auditorium number
- TMS Server configuration (local or remote)
- Presence or absence of NA10 and DFC100 devices
- Network IP addresses of DSS200 interfaces and auditorium devices (DSS200, projector, CP650, and so on)
- Keyboard language
- Advanced options
- System name
- Maximum transmission unit (MTU) for auditorium and theatre networks
- Interface on which Simple Network Management Protocol (SNMP) is presented

Unconfig

When you type `unconfig` at the login prompt and enter `dolby` at the password prompt, this utility allows the resetting of network configurations, deletion of all content, resetting of parameters, or (if applicable) resetting the TMS Server database (shows and schedules).

Serial

When you type `serial` at the login prompt and enter `dolby` at the password prompt, this utility enables you to export the serial automation configuration of one auditorium to a text file on a USB drive or import a previously exported configuration file. You must run this utility on the system where the SMS/TMS Server is running. In a Show Library network, this must be the Show Library.

This utility also allows you to export the serial automation configuration from one stand-alone system and import it to another stand-alone system.

D.1.4 Show Library and TMS Login Utilities

The Show Library provides various utilities that you can access using special login names. Access a login prompt by pressing <Ctrl> + <Alt> +< F1> (<F2>, <F3>, and <F4> also provide login consoles), then enter the password: `dolby`

Config

When you type `config` at the login prompt and enter `dolby` at the password prompt, this utility provides numerous options including:

- Configure network interfaces
- Select keyboard language
- Configure advanced options
- Offload/restore TMS Server database
- Configure optional SAS external storage device

Unconfig

When you type `unconfig` at the login prompt and enter `dolby` at the password prompt, this utility allows the resetting of network configurations, deletion of all content, resetting of parameters, or resetting the TMS Server database.

D.1.5 DSS200 and Show Library Administrator Login

There is a user-level login called `administrator`. This login provides diagnostic and utility functions, which allow installers or network administrators to troubleshoot networking, directly review log files, execute remote software upgrades (see below), or reboot the system.

You can access the login prompt on these systems by typing <Ctrl> + <Alt> + <F1> on a connected keyboard.

The `administrator` login uses the same password (`dolby)` as the `config` and `unconfig` logins.

File System Access

The `administrator` login provides only restricted access to the general file system. A user has read-only access to the **status/logs** directory for diagnostic purposes, but cannot modify the logs or the logs directory.

Operating System Commands

The following Linux® operating system commands are accessible using the `administrator` login:

- `arp`
- `ifconfig`
- `ping`
- `route`
- `ssh`
- `traceroute`
- `uptime`
- `reboot`
- `bash`
- `ls`
- `cat`
- `less`
- `grep`

For information on these commands, consult generally available Linux operating system documentation. With the `administrator` login, you cannot change the network settings using the above commands. The `config` login is provided for this purpose.

Scripts

After logging in with the `administrator` login, you can change to the scripts directory to access some custom Dolby Digital Cinema utility functions. Each of these functions provides usage information if run without parameters. When a host or IP address is required, you can enter `localhost` to refer to the local system, but you can also use these scripts to connect to any accessible Dolby Digital Cinema system on the network.

The following scripts are provided by the `administrator` login. For details on the remote software upgrade scripts, see Section 4.6.2.

- `listUpgradePackages.sh`: Lists the upgrade packages uploaded using FTP or available on a removable device.
- `executeUpgradePackage.sh`: Applies an upgrade package and reboots the system.
- `deleteUpgradePackage.sh`: Deletes a previously uploaded (via FTP) upgrade package.
- `purgeSoftwareKDMs.sh`: Deletes previously uploaded software upgrade key delivery messages (KDMs, or licenses).
- `getAllParameters.sh`: A diagnostic utility to determine the internal state of the software.
- `deleteOrphanTracks.sh`: Deletes any track file not referred to by any clip; this includes subtitle font/png files as well as .mxf files.

You must prefix the above commands with `./` to execute from the current directory.

License Verification

To verify each of your license files (KDMs), right-click on each xml file, open the file in WordPad or Notepad, and verify the following:

1. Verify correct dates and time for the KDM. (Remember, these are UTC, and not local time.)

   In summer (MDT), subtract six hours from UTC; In winter (MST), subtract seven hours.

   <ContentKeysNotValidBefore>2008-07-16T23:01:00-07:00</ContentKeysNotValidBefore>

   <ContentKeysNotValidAfter>2008-07-25T22:59:00-07:00</ContentKeysNotValidAfter>

   If it is incorrect, call the KDM distributor and tell them the KDM date/time are wrong.

2. Verify CAT862 (Media Block) Serial Number in <X509SubjectName> (value is in hex). Serial Number is in green.

   <X509SubjectName>dnQualifier=gqQ77qdIJsh2CrKwYtKujZblxaE=,CN=SM.

   Dolby-CAT862-000000fb,O=DC.Cinea.Com,OU=DolbyMediaBlock</X509SubjectName>

   If it is incorrect, call the KDM distributor and tell them the KDM is for the wrong server.

3. Verify CAT862 (Media Block) hash against dcine_equipment_all (use the latest version). Hash is in green.

   <X509SubjectName>dnQualifier=gqQ77qdIJsh2CrKwYtKujZblxaE=,CN=SM.

   Dolby-CAT862-000000fb,O=DC.Cinea.Com,OU=DolbyMediaBlock</X509SubjectName>

   If it is incorrect, call the KDM distributor and tell them the KDM is generated from the wrong certificate.

4. Verify that the KDM is generated for the correct content. Verification is made by comparing either <CompositionPlayListID> or <ContentTitleText> against a valid KDM.

   <CompositionPlaylistId>urn:uuid:c033ec20-42db-440c-b753-6537c808cc49</CompositionPlaylistId>

   <ContentTitleText>Megaplex Movie_FTR-S_EN-XX_US_51_2K_HFP_20080101_Mike</ContentTitleText>

   If it is incorrect, call the KDM distributor and tell them that the KDM is generated for the wrong content.

5. If all of the above are correct, and you are still having problems, delete the licenses in TMS (select **Content**/**Manage/Licenses**/**Delete all licenses for this auditorium**). Then reload the KDMs.

   If none of above are correct, call your authorized Dolby technical representative for assistance.

GPI/0 Default Configuration and Schema

This appendix provides you with the Dolby® Digital Cinema default GPI/O configuration and the configuration schema that may help you create your customized GPI/O XML configuration file. To import your customized configuration file into the system, run the DSS200 Config script, as described in Section 3.6. As you progress through the Config script, you'll get to the section on importing your configuration file, as described on page 39.

F.1 GPI/O Default Configuration

```
<?xml version="1.0" encoding="UTF-8" standalone="yes"?>
<GPIOConfiguration>
    <OutputPin pin="2" polarity="HIGH">
        <LatchOutput enableName="GPO2ON" disableName="GPO2OFF"/>
    </OutputPin>
    <OutputPin pin="3" polarity="HIGH">
        <LatchOutput enableName="GPO3ON" disableName="GPO3OFF"/>
    </OutputPin>
    <OutputPin pin="4" polarity="HIGH">
        <LatchOutput enableName="GPO4ON" disableName="GPO4OFF"/>
    </OutputPin>
    <OutputPin pin="5" polarity="HIGH">
        <LatchOutput enableName="GPO5ON" disableName="GPO5OFF"/>
    </OutputPin>
    <OutputPin pin="6" polarity="HIGH">
        <LatchOutput enableName="GPO6ON" disableName="GPO6OFF"/>
    </OutputPin>
    <OutputPin pin="7" polarity="HIGH">
        <PulseOutput name="GPO7"/>
    </OutputPin>
    <OutputPin pin="8" polarity="HIGH">
        <PulseOutput name="GPO8"/>
    </OutputPin>
    <OutputPin pin="9" polarity="HIGH">
        <PulseOutput name="GPO9"/>
    </OutputPin>
    <OutputPin pin="10" polarity="HIGH">
```

```
        <PulseOutput name="GPO10"/>
  </OutputPin>
</GPIOConfiguration>
```

F.2 GPI/O Configuration Schema

```
<?xml version="1.0" encoding="UTF-8"?>
<xs:schema xmlns:xs="http://www.w3.org/2001/XMLSchema"
elementFormDefault="qualified" attributeFormDefault="unqualified">
    <xs:element name="GPIOConfiguration">
        <xs:annotation>
          <xs:documentation>Describes a configuration for all configurable pins
on a GPIO card (output pins 2-10; 1 is always a HIGH playback latch, inputs are
static)</xs:documentation>
        </xs:annotation>
        <xs:complexType>
            <xs:sequence>
                <xs:element ref="OutputPin" minOccurs="9" maxOccurs="9"/>
            </xs:sequence>
        </xs:complexType>
    </xs:element>
    <xs:element name="OutputPin">
        <xs:annotation>
            <xs:documentation>Configuration for a single output
pin</xs:documentation>
        </xs:annotation>
        <xs:complexType>
            <xs:choice>
                <xs:element name="LatchOutput" minOccurs="0" maxOccurs="1">
                    <xs:annotation>
                        <xs:documentation>A latch output, with both enable and
disable names</xs:documentation>
                    </xs:annotation>
                    <xs:complexType>
                        <xs:attribute name="enableName" type="xs:string"
use="required">
                            <xs:annotation>
                                <xs:documentation>Cue name that will latch the
pin on</xs:documentation>
                            </xs:annotation>
                        </xs:attribute>
                        <xs:attribute name="disableName" type="xs:string"
use="required">
```

```
                            <xs:annotation>
                                <xs:documentation>Cue name that will latch the
pin off</xs:documentation>
                            </xs:annotation>
                        </xs:attribute>
                    </xs:complexType>
                </xs:element>
                <xs:element name="PulseOutput" minOccurs="0" maxOccurs="1">
                    <xs:annotation>
                        <xs:documentation>A pulse output cue, with 500ms
width</xs:documentation>
                    </xs:annotation>
                    <xs:complexType>
                     <xs:attribute name="name" type="xs:string" use="required">
                            <xs:annotation>
                             <xs:documentation>Cue name that will trigger this
pulse output</xs:documentation>
                            </xs:annotation>
                        </xs:attribute>
                    </xs:complexType>
                </xs:element>
            </xs:choice>
            <xs:attribute name="pin" type="PinNumber" use="required">
                <xs:annotation>
                    <xs:documentation>The number of this output pin; duplicate
configurations for the same pin will be ignored and the first one will be
used</xs:documentation>
                </xs:annotation>
            </xs:attribute>
            <xs:attribute name="polarity" type="PinPolarity" use="required">
                <xs:annotation>
                    <xs:documentation>The polarity for this pin; when the pin
fires, it will go to this polarity</xs:documentation>
                </xs:annotation>
            </xs:attribute>
            <xs:attribute name="type" type="CueType" use="optional">
                <xs:annotation>
                    <xs:documentation>The type of this cue (lights, sound,
projector); used as for logical display in the UI</xs:documentation>
                </xs:annotation>
            </xs:attribute>
        </xs:complexType>
    </xs:element>
```

```
    <xs:simpleType name="PinPolarity">
        <xs:annotation>
            <xs:documentation>Polarity for pins; HIGH is the
default</xs:documentation>
        </xs:annotation>
        <xs:restriction base="xs:string">
            <xs:enumeration value="HIGH"/>
            <xs:enumeration value="LOW"/>
        </xs:restriction>
    </xs:simpleType>
    <xs:simpleType name="PinNumber">
        <xs:annotation>
            <xs:documentation>The number of a pin; 2-10
inclusive</xs:documentation>
        </xs:annotation>
        <xs:restriction base="xs:int">
            <xs:minInclusive value="2"/>
            <xs:maxInclusive value="10"/>
        </xs:restriction>
    </xs:simpleType>
</xs:schema>
```

Glossary

actual duration

The actual length or run time of a digital show computed by summing the duration data of each clip in the show.

alert

A warning or error message within the Dolby® Digital Cinema system.

auditorium

An individual screen in a theatre complex. For example, a 12-plex has 12 individual auditoriums.

automation system

A device responsible for handling the electrical interface to auditorium equipment such as lights and masking.

clip

A single piece of digital content such as a trailer, policy (for example, a no-smoking reminder), advertisement, or feature. Clips are assembled in a sequence to create a show. Clips can be any length.

clip type

Describes the type of content within a clip (for example, feature, trailer, policy, advertisement, test, transition, or PSA).

composition play list (CPL)

A list of the raw files in a clip with instructions describing how to play these files along with a unique ID and a means for authentication.

cue

A content-synchronized event, such as “lights down” or “masking scope,” that can be inserted in a digital show. The cue is implemented by automation equipment in the auditorium. The cues in the Dolby TMS show element library represent the cues available in all auditorium devices (such as the projector or a Dolby NA10).

D-cinema

Digital cinema: the production and exhibition of theatrical content using digital audio and video for presentation, projected digitally.

digital cinema package (DCP)

Contains one or more pieces of compressed and optionally encrypted content (clips) often delivered on a hard drive, DVD-R, or via a network connection (for example, via a satellite transmission). This includes the physical data files and a list or lists describing how to play these files, along with a means for authentication. The DCP is delivered from the distributor to the exhibitor.

estimated duration

An estimate of the total run time of a show as input by the user. This is used for shows created before all the content is available to facilitate the scheduling of show times in the future.

feature

A type of clip containing the main presentation.

intermission

The time between the end of one scheduled show and the start of the next.

license, also known as key delivery message (KDM)

Data files that are required to play back encrypted content on a Dolby Digital Cinema system. These files may be compressed, which requires unzipping.

note

A descriptive text element that can be attached to a show or a clip. A note can be used as a reminder to check something or to provide information to the next person coming on shift about a particular show or clip (for example, “Change the trailer package after Friday’s show”).

packing list

A list of all the content in a DCP.

show

The entire program that is to be played in a theatre auditorium. Typically one or more trailers, advertisements, and policies (for example, no smoking) and the main feature. A show contains content (clips) and cues in a specific sequence.

theatre

The collection of auditoriums in a cinema complex managed by Dolby TMS .

theatre assets

The physical facilities in an auditorium such as lights, curtains, and masking.

Index